344 FLAT HILLS

No. 99-19 Use Double Washed Stone #344 FEE

COMMONWEALTH OF MASSACHUSETTS

Board of Health, Amherst, *MA.*

APPLICATION FOR DISPOSAL SYSTEM CONSTRUCTION PERMIT

COMMONWEALTH OF MASSACHUSETTS ALAN E. WEISS REG. #933 REGISTERED SANITARIAN

Application for a Permit to Construct( ) Repair(✓) Upgrade(✓) Abandon( ) - ❑ **Complete System** ❑ **Individual Components**

Location	344 Flat Hills Rd.	Owner's Name	Todd Residence
Map/Parcel#	MAP 68, LOT 5	Address	c/o Keith Kaneta, Jones Town + County RE.
Lot#	#344	Telephone#	549-3700
* Installer's Name	Karl's	Designer's Name	Alan Weiss
Address	327 River Drive	Address	Belchertown
Telephone#	549-5396	Telephone#	413-323-5957

Type of Building Res Lot Size 10.1 AC ~~sq. ft.~~

Dwelling - No. of Bedrooms 4 Garbage grinder N

Other - Type of Building _____ No. of persons _____ Showers ( ), Cafeteria ( )

Other Fixtures _____

Design Flow (min. required) 440 gpd Calculated design flow 480 Design flow provided 480 gpd

Plan: Date 9/13/99 Number of sheets 4 Revision Date _____

Title SEPTIC REPAIR PLAN FOR TODD RES.

Description of Soil(s) CLASS II

Soil Evaluator Form No. _____ Name of Soil Evaluator A. Weiss Date of Evaluation 9/

DESCRIPTION OF REPAIRS OR ALTERATIONS NEW S. TANK, P. CHAMBER + L. FIELD.

The undersigned agrees to install the above described Individual Sewage Disposal System in accordance with the provisions of TITLE 5 and further agrees to not to place the system in operation until a Certificate of Compliance has been issued by the Board of Health.

* Signed Keith O. Kaneta Date 9/14/99

Inspections _____

No. 99-19 FEE

COMMONWEALTH OF MASSACHUSETTS

Board of Health, Amherst, *MA.*

CERTIFICATE OF COMPLIANCE

Description of Work: ❑ **Individual Component(s)** ☑ **Complete System**

The undersigned hereby certify that the Sewage Disposal System; Constructed ( ), Repaired (✓), Upgraded ( ), Abandoned ( )

by: Karl's

at 344 ~~Flat~~ Hills Road

has been installed in accordance with the provisions of 310 CMR 15.00 (Title 5) and the approved design plans/as-built plans relating to application No. 99-19, dated _____. Approved Design Flow _____(gpd)

Installer Mark McCaul KARL'S EXCAVATING

Designer: [signature] Inspector: David Zagumbo Date: 10-27-99

The issuance of this permit shall not be construed as a guarantee that the system will function as designed.

No. 99-19 FEE

COMMONWEALTH OF MASSACHUSETTS

Board of Health, Amherst, *MA.*

DISPOSAL SYSTEM CONSTRUCTION PERMIT

Permission is hereby granted to; Construct( ) Repair(✓) Upgrade( ) Abandon( ) an individual sewage disposal system at 344 Flat Hills Road as described in the application for Disposal System Construction Permit No. 99-19, dated 9-16-99.

Provided: Construction shall be completed within three years of the date of this permit. All local conditions must be met.

Form 1255 Rev. 5/96 A.M. Sulkin Co. Boston, MA

Date 9-16-99 Board of Health David Zagumbo for Inspector Lena Dyer

COLD SPRING ENVIRONMENTAL CONSULTANTS, INC.

ALAN E. WEISS, M.S., L.S.P.
Licensed Site Professional
Registered Sanitarian
Hydrogeologist
President

•Subsurface Investigations
•21E Site Investigations
•Pollution Remediation
•Percolation Tests and Septic Designs

350 Old Enfield Rd.
Belchertown, MA 01007
(413) 323-5957 & 323-4916 (FAX)

Date: 6/18/98 + 8/26/98

Commonwealth of Massachusetts
AMHERST, Massachusetts

Soil Suitability Assessment for On-site Sewage Disposal

Performed By: A. WEISS

Date: 6/18/98 + 8/26/98

Witnessed By: D. ZAROZINKI

c/o Ellen Stutsman, Kohl Construction.

Location Address or Lot # 344 Flathills Rd. Amherst, MA	Owner's Name, Address, and Telephone # DON + EDITH ALISON (BUYER) 689 NORTHEAST ST AMHERST, MA. 01002
New Construction ☐ Repair ☑ New Bldg	John Theroux, Apt 3, 321 BEACON ST Boston

Office Review * Repair per BOH designation

Published Soil Survey Available: No ☐ Yes ☑

Year Published 1981 Publication Scale 1:5,840 Soil Map Unit MONTAUK FSL MoB

Drainage Class MOD-SLOW PERM. Soil Limitations SEASONAL PERCHED H2O TABLE

Surficial Geologic Report Available: No ☑ Yes ☐

Year Published Publication Scale

Geologic Material (Map Unit)

Landform TERRACE

Flood Insurance Rate Map:

Above 500 year flood boundary No ☐ Yes ☑

Within 500 year flood boundary No ☑ Yes ☐

Within 100 year flood boundary No ☑ Yes ☐

Wetland Area:

National Wetland Inventory Map (map unit)

Wetlands Conservancy Program Map (map unit)

Current Water Resource Conditions (USGS): Month

Range: Above Normal ☑ Normal ☑ Below Normal ☐

Other References Reviewed: _____

Location Address or Lot No. 344 Flathills Rd.

On-site Review

8/26/98

Deep Hole Number TP-2 Date: 6/18/98 Time: 9:00 Weather SUN. 80°F

Location (identify on site plan) SEE SKETCH

Land Use RESID. Slope (%) 5-7 Surface Stones Few - Some

Vegetation GRASS

Landform TERRACE

Position on landscape (sketch on the back)

Distances from:

Open Water Body 100'+ feet Drainage way 80'+ feet

Possible Wet Area 60'+ feet Property Line 40'+ feet

Drinking Water Well 100' feet Other

DEEP OBSERVATION HOLE LOG*

	Depth from Surface (Inches)	Soil Horizon	Soil Texture (USDA)	Soil Color (Munsell)	Soil Mottling	Other (Structure, Stones, Boulders, Consistency, % Gravel)
TP-2	0-14"	A	FSL	2.5Y 3/3		Friable
	14-22"	Bw	FSL	2.5Y 5/4		Friable
	22-84"	C1	SL	2.5Y 5/4	2.5YR 4/6 at 36"	Firm, 10% cobbles + stones
P-3 26/98	0-10"	A	FSL	2.5Y 3/3		Friable
	10"-20"	Bw	FSL	2.5Y 5/4		Friable
	20"-102"	C1	SL	2.5Y 5/3	2.5Y 4/6 @ 36"	Firm, 15% Angular cobbles + stones
USE #4) P-4 26/98	0-8"	A	FSL	2.5Y 3/3		
	8-22"	Bw	FSL	2.5Y 5/4	Hi 10YR 5/6	Lo 5Y 4/3
	22"-120"	C1	SL	2.5Y 5/3	5Y @ 52"	Slightly Firm, 10% stones + cobbles

* MINIMUM OF 2 HOLES REQUIRED AT EVERY PROPOSED DISPOSAL AREA

Parent Material (geologic) GLACIAL TILL Depth to Bedrock: 84"

Depth to Groundwater: Standing Water in the Hole: ~~TP-1 60"~~, TP-2 74" Weeping from Pit Face: ~~[illegible]~~ 74" (TP-2) (NOT TP-4)

Estimated Seasonal High Ground Water: 36" (TP-2 + TP-3) (52" in hole #4)

- (5" OF RAIN IN LAST WEEK)
- (USE TP-4)

Location Address or Lot No. 344 Flat Hills RD.

COMMONWEALTH OF MASSACHUSETTS

Amherst, Massachusetts

Percolation Test*

Date: 6/18/98 + 8/26/98	Time: 8:15 AM		*
Observation Hole #	#P2	P_3	P_4
Depth of Perc	38"	45"	43"
Start Pre-soak	8:45	8:45	9:15
End Pre-soak	9:00	9:00	9:32
Time at 12"	9:00	9:00	9:32
Time at 9"	9:23	9:12	9:40
Time at 6"	9:58	10:05	9:56
Time (9"-6")	35 min	42	16 min
Rate Min./Inch	15 min/IN	14 MIN/IN.	6 min/IN

USE Perc #4

* Minimum of 1 percolation test must be performed in both the primary area AND reserve area.

Site Passed ☑ Site Failed ☐

Performed By: A. WEISS

Witnessed By: D. ZARCZINSKI, M. LOMBARD

Comments: * PERCED AS REPAIR, RAISED BED OVER TP-2 (Not)
* NEED WETLAND DETEMINATION + SURVEY TO DESIGN. (for FRUT)
8/26/98 - USE TP-4 (Best Location).

Location Address or Lot No. 344 FLAT HILLS RD

Determination for Seasonal High Water Table

Method Used:

- ☐ Depth observed standing in observation hole inches
- ☐ Depth weeping from side of observation hole inches
- ☑ Depth to soil mottles 36" inches (TP-2 + TP-3), (52" IN TP-4)
- ☐ Ground water adjustment ..... feet

Index Well Number ..... Reading Date ..... Index well level

Adjustment factor ..... Adjusted ground water level

Depth of Naturally Occurring Pervious Material

Does at least four feet of naturally occurring pervious material exist in all areas observed throughout the area proposed for the soil absorption system? yes

If not, what is the depth of naturally occurring pervious material? _____

Certification

I certify that on June, 95 (date) I have passed the soil evaluator examination approved by the Department of Environmental Protection and that the above analysis was performed by me consistent with the required training, expertise and experience described in 310 CMR 15.017.

Signature _____ Date 6/18/98
+ 8/26/98

COMMONWEALTH OF MASSACHUSETTS
ALAN E. WEISS
REG. #933
REGISTERED SANITARIAN

FIGURE 1: SITE LOCUS

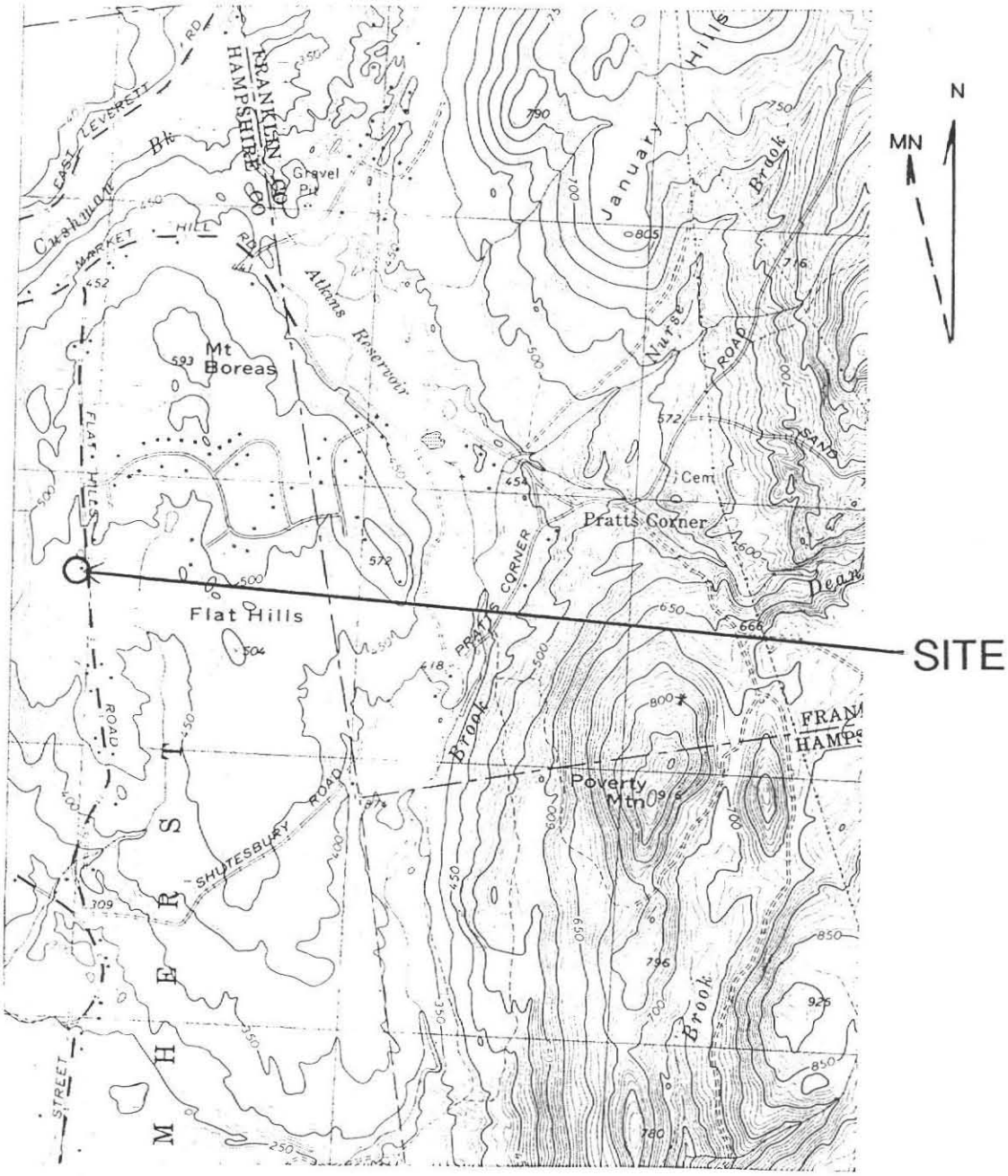

SCALE: 1"=2,083 FT.

USGS 7.5 MIN. QUAD.

0 FEET 2000

COLD SPRING ENVIRONMENTAL INC.

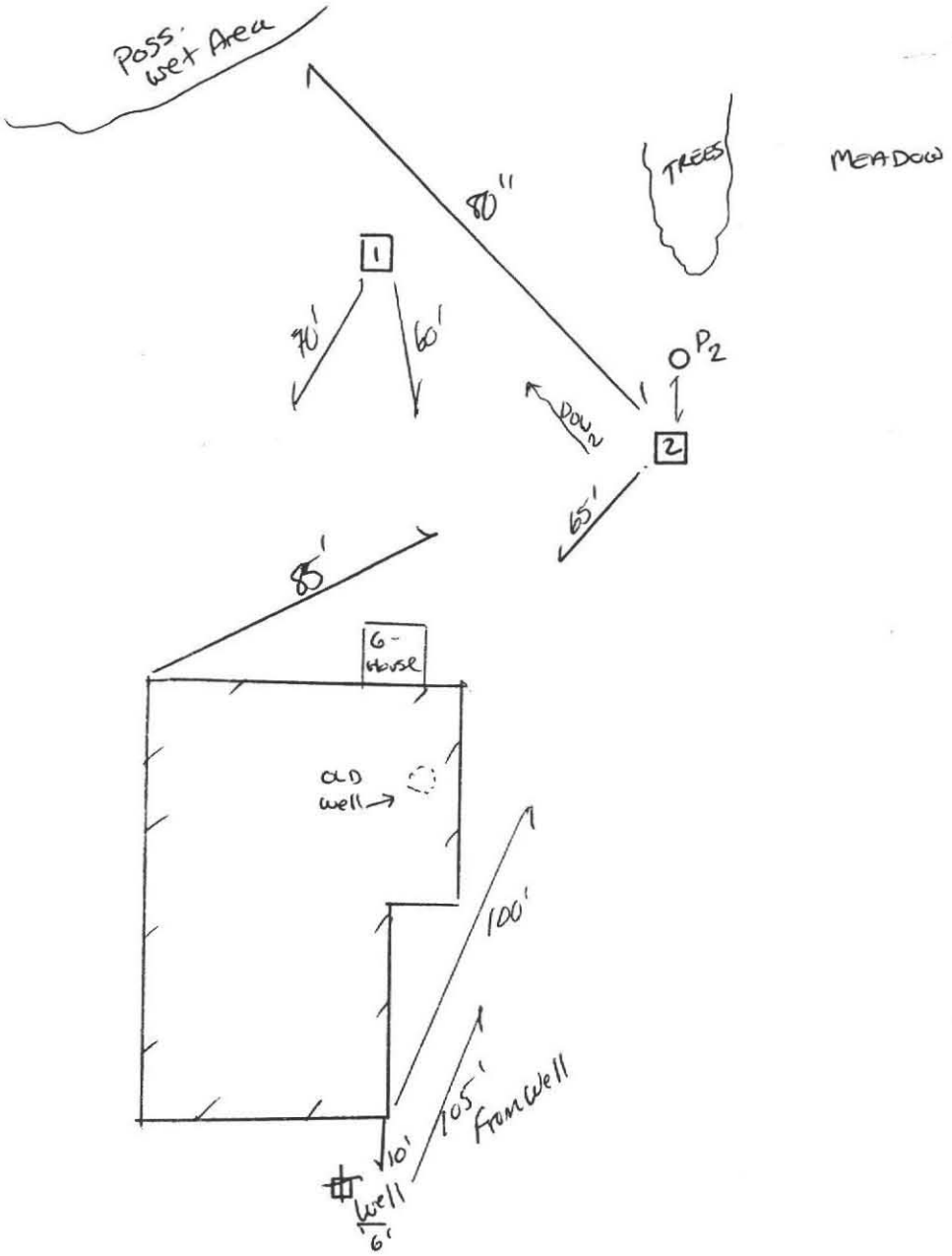

NOTE:

1. OWNER TO RAZE HOUSE + DRILL NEW WELL
2. NEED SURVEY W/ WETLANDS TO DESIGN.

Location Address or Lot No. 344 FLAT HILLS RD

Determination for Seasonal High Water Table

Method Used:

- ☐ Depth observed standing in observation hole inches
- ☐ Depth weeping from side of observation hole inches
- ☑ Depth to soil mottles 36" inches
- ☐ Ground water adjustment ..... feet

Index Well Number ..... Reading Date ..... Index well level

Adjustment factor ..... Adjusted ground water level .....

Depth of Naturally Occurring Pervious Material

Does at least four feet of naturally occurring pervious material exist in all areas observed throughout the area proposed for the soil absorption system? yes

If not, what is the depth of naturally occurring pervious material? _____

Certification

I certify that on June, 95 (date) I have passed the soil evaluator examination approved by the Department of Environmental Protection and that the above analysis was performed by me consistent with the required training, expertise and experience described in 310 CMR 15.017.

Signature _____ Date 6/18/98

COMMONWEALTH OF MASSACHUSETTS
ALAN E. WEISS
REG. #933
REGISTERED SANITARIAN

COLD SPRING ENVIRONMENTAL CONSULTANTS, INC.

ALAN E. WEISS, M.S., L.S.P.
Licensed Site Professional
Registered Sanitarian
Hydrogeologist
President

•Subsurface Investigations
•21E Site Investigations
•Pollution Remediation
•Percolation Tests and Septic Designs

350 Old Enfield Rd.
Belchertown, MA 01007
(413) 323-5957 & 323-4916 (FAX)

COPY

Date: 6/18/98

Commonwealth of Massachusetts
AMHERST, Massachusetts

Soil Suitability Assessment for On-site Sewage Disposal

Performed By: A. WEISS
Witnessed By: D. ZAROZINKI

Date: 6/18/98

Location Address or Lot # 344 Flathills Rd. Amherst	Owner's Name, Address, and Telephone # DON + EDITH ALLISON (BUYER) 689 NORTHEAST ST. AMHERST, MA. 01002
New Construction ☐ Repair ☑	

Office Review * Repair Per BOH designation

Published Soil Survey Available: No ☐ Yes ☑

Year Published 1981 Publication Scale 15,840 Soil Map Unit MoB MONTAUK FSL

Drainage Class MoD-Slow Perm. Soil Limitations SEASONAL PERCHED H2O TABLE

Surficial Geologic Report Available: No ☑ Yes ☐

Year Published Publication Scale

Geologic Material (Map Unit)

Landform TERRACE

Flood Insurance Rate Map:

Above 500 year flood boundary No ☐ Yes ☑

Within 500 year flood boundary No ☑ Yes ☐

Within 100 year flood boundary No ☑ Yes ☐

Wetland Area:

National Wetland Inventory Map (map unit)

Wetlands Conservancy Program Map (map unit)

Current Water Resource Conditions (USGS): Month

Range: Above Normal ☑ Normal ☑ Below Normal ☐

Other References Reviewed: _____

Location Address or Lot No. 344 Flat Hills RD.

COMMONWEALTH OF MASSACHUSETTS

, Massachusetts

Percolation Test*

Date: 6/18/98 Time:

Observation Hole #	#P2	
Depth of Perc	38"	
Start Pre-soak	8:45	
End Pre-soak	9:00	
Time at 12"	9:00	
Time at 9"	9:23	
Time at 6"	9:58	
Time (9"-6")	35 min	
Rate Min./Inch	15 min /IN	

* Minimum of 1 percolation test must be performed in both the primary area AND reserve area.

Site Passed ☑ Site Failed ☐

Performed By: A. WEISS

Witnessed By: D. ZARZINSKI

Comments: * PERCED AS REPAIR, RAISED BED OVER TP-2.
* NEED WETLAND DETEMINATION + SURVEY TO DESIGN.

Location Address or Lot No. 344 flathills rd.

On-site Review

Deep Hole Number TP-2 Date: 6/18/98 Time: 9:00 Weather SUN, 80°F

Location (identify on site plan) SEE SKETCH

Land Use RESID. Slope (%) 5-9 Surface Stones few - Some

Vegetation GRASS

Landform TERRACE

Position on landscape (sketch on the back)

Distances from:

Open Water Body 100'+ feet Drainage way 80'+ feet

Possible Wet Area 80'+ feet Property Line 40'+ feet

Drinking Water Well 100' feet Other

DEEP OBSERVATION HOLE LOG*

	Depth from Surface (Inches)	Soil Horizon	Soil Texture (USDA)	Soil Color (Munsell)	Soil Mottling	Other (Structure, Stones, Boulders, Consistency, % Gravel)
TP-2	0-14"	A	FSL	2.5Y 3/3		friable
	14-22"	Bw	FSL	2.5Y 5/4		friable
	22-84"	C1	SL	2.5Y 5/4	2.5YR 4/6 at 36"	firm, 10% cobbles + stones

* MINIMUM OF 2 HOLES REQUIRED AT EVERY PROPOSED DISPOSAL AREA

Parent Material (geologic) GLACIAL TILL Depth to Bedrock: 84"

Depth to Groundwater: Standing Water in the Hole: ~~TP-1 60"~~, TP-2 74" Weeping from Pit Face: ~~60"~~ 74"

Estimated Seasonal High Ground Water: 36"

- (5" OF RAIN IN LAST WEEK)
- USE TP-2

No. 344 Flathills Road Date: 8/21/98

Commonwealth of Massachusetts
, Massachusetts

Soil Suitability Assessment for On-site Sewage Disposal

Performed By: Al Weiss Cold Spring Environmental Date: 8/21/98
Witnessed By: Mike Lombard

Location Address or Lot # 344 Flathills Road Amherst MA 01002	Owner's Name, Address, and Telephone # John Thounox apt 3 377 Beacon Street
New Construction ☐ Repair ☐	

Office Review

Published Soil Survey Available: No ☐ Yes ☐

Year Published ..... Publication Scale ..... Soil Map Unit .....

Drainage Class ..... Soil Limitations .....

Surficial Geologic Report Available: No ☐ Yes ☐

Year Published ..... Publication Scale .....

Geologic Material (Map Unit) .....

Landform .....

Flood Insurance Rate Map:

Above 500 year flood boundary No ☐ Yes ☐

Within 500 year flood boundary No ☐ Yes ☐

Within 100 year flood boundary No ☐ Yes ☐

Wetland Area:

National Wetland Inventory Map (map unit) .....

Wetlands Conservancy Program Map (map unit) .....

Current Water Resource Conditions (USGS): Month .....

Range :Above Normal ☐ Normal ☐ Below Normal ☐

Other References Reviewed: _____

Location Address or Lot No. 344 Flat Hills Road

On-site Review

Deep Hole Number TP 3 Date: 8/26/98 Time: 8 44 Weather Cloudy
Location (identify on site plan)
Land Use Residence Slope (%) Surface Stones
Vegetation Grass
Landform Terrace
Position on landscape (sketch on the back)
Distances from:

Open Water Body 100+ feet Drainage way 80+ feet
Possible Wet Area 80+ feet Property Line 80+ feet
Drinking Water Well 100' feet Other

DEEP OBSERVATION HOLE LOG*

Depth from Surface (Inches)	Soil Horizon	Soil Texture (USDA)	Soil Color (Munsell)	Soil Mottling	Other (Structure, Stones, Boulders, Consistency, % Gravel)
0 - 10"	A	FSL			Friable
10" - 20"	Bw	FSL			Friable
20" - 102"	C1	SL	2.5Y 5/3		Angular Fri 15% cobbles stones

* MINIMUM OF 2 HOLES REQUIRED AT EVERY PROPOSED DISPOSAL AREA

Parent Material (geologic) _____ Depth to Bedrock: _____
Depth to Groundwater: Standing Water in the Hole: None Weeping from Pit Face: _____
Estimated Seasonal High Ground Water: 36"

Location Address or Lot No. 344 Flathills Road

On-site Review

Deep Hole Number #4 Date: 8/26/98 Time: 9:15 Weather

Location (identify on site plan)

Land Use Slope (%) Surface Stones

Vegetation

Landform

Position on landscape (sketch on the back)

Distances from:

Open Water Body	feet	Drainage way	feet
Possible Wet Area	feet	Property Line	feet
Drinking Water Well	feet	Other	

DEEP OBSERVATION HOLE LOG*

Depth from Surface (Inches)	Soil Horizon	Soil Texture (USDA)	Soil Color (Munsell)	Soil Mottling	Other (Structure, Stones, Boulders, Consistency, % Gravel)
0 - 8	A	FSL	2.5Y 3/3		
8 - 22	Bw	FSL	2.5Y 5/4		
22 - 120	C1	SL	2.5Y 5/3 20/	10YR 5/1 5Y 4/3 52"	Slightly Firm 10% stones some cobble

* MINIMUM OF 2 HOLES REQUIRED AT EVERY PROPOSED DISPOSAL AREA

Parent Material (geologic) Glacial Till Depth to Bedrock: 84"

Depth to Groundwater: Standing Water in the Hole: Weeping from Pit Face:

Estimated Seasonal High Ground Water: 52"

FORM 12 - PERCOLATION TEST

Location Address or Lot No. 344 Flathills Road

COMMONWEALTH OF MASSACHUSETTS

, Massachusetts

Percolation Test*

Date: 8/26/98 Time: 844

Observation Hole #	#3	
Depth of Perc	45"	
Start Pre-soak	844	
End Pre-soak	9:00	
Time at 12"	9:00	
Time at 9"	9:22	
Time at 6"	10:05	
Time (9"-6")	43m	
Rate Min./Inch	14 min	

* Minimum of 1 percolation test must be performed in both the primary area AND reserve area.

Site Passed ☑ Site Failed ☐

Performed By: Al Weiss Cold Spring Enviromental

Witnessed By: Mike Lombard Inspection Services

Comments:

DEP APPROVED FORM - 12/07/95

FORM 12 - PERCOLATION TEST

Francis TODD

Location Address or Lot No. 344 Flat Hills Road

COMMONWEALTH OF MASSACHUSETTS

, Massachusetts

Percolation Test*

Date: 8/26/98 Time: 9:15

Observation Hole #	# 4	
Depth of Perc	43"	
Start Pre-soak	9:15	
End Pre-soak	9:32	
Time at 12"	9:32	
Time at 9"	9:40	
Time at 6"	9:56	
Time (9"-6")	16 min	6 min
Rate Min./Inch		

* Minimum of 1 percolation test must be performed in both the primary area AND reserve area.

Site Passed ☑ Site Failed ☐

Performed By: Al Weir

Witnessed By: Mike Lombard

Comments: 40 Feet to Back Tree line

DEP

DEP APPROVED FORM - 12/07/95

OH # 2011

No. 344 FIAT HILLS ROAD Date: 6-18-98

Commonwealth of Massachusetts
, Massachusetts

Soil Suitability Assessment for On-site Sewage Disposal

Performed By: AL WEISS Date: 6/18/98
Witnessed By: Michael Lombard

Location Address or Lot #	Owner's Name, Address, and Telephone #
EDITH ALLISON 344 FIAT HILLS ROAD AMHERST, MA New Construction ☐ Repair ☑	

Office Review

Published Soil Survey Available: No ☐ Yes ☐

Year Published ..... Publication Scale ..... Soil Map Unit .....

Drainage Class ..... Soil Limitations .....

Surficial Geologic Report Available: No ☐ Yes ☐

Year Published ..... Publication Scale .....

Geologic Material (Map Unit) .....

Landform .....

Flood Insurance Rate Map:

Above 500 year flood boundary No ☐ Yes ☐

Within 500 year flood boundary No ☐ Yes ☐

Within 100 year flood boundary No ☐ Yes ☐

Wetland Area:

National Wetland Inventory Map (map unit) .....

Wetlands Conservancy Program Map (map unit) .....

Current Water Resource Conditions (USGS): Month .....

Range :Above Normal ☐ Normal ☐ Below Normal ☐

Other References Reviewed: _____

Location Address or Lot No. 344 Flat Hills Road

On-site Review

Deep Hole Number 2 Date: 6/18/98 Time: 8:45 Weather Cloudy.
Location (identify on site plan)
Land Use Slope (%) 5% Surface Stones Few
Vegetation Grass Few Tree Mixed
Landform
Position on landscape (sketch on the back)
Distances from:

Open Water Body 200+ feet Drainage way 100+ feet
Possible Wet Area 100+ feet Property Line 200+ feet
Drinking Water Well 100+ feet Other

DEEP OBSERVATION HOLE LOG*

Depth from Surface (Inches)	Soil Horizon	Soil Texture (USDA)	Soil Color (Munsell)	Soil Mottling	Other (Structure, Stones, Boulders, Consistency, % Gravel)
0-14	A	FSL	2.5Y 3/3		friable Sandy glacial till
14-22	Bw	FSL	2.5Y 5/4		
22-84	C	SL	2.5Y 5/4	2.5Y 4/6 AT 36"	Firm 10% cobbles few Boulders

* MINIMUM OF 2 HOLES REQUIRED AT EVERY PROPOSED DISPOSAL AREA

Parent Material (geologic) Sandy till Depth to Bedrock:
Depth to Groundwater: Standing Water in the Hole: 84" Weeping from Pit Face: 62"
Estimated Seasonal High Ground Water: 36"

Location Address or Lot No. _____

On-site Review

Deep Hole Number 1 Date: 6/18 Time: Weather Cloudy

Location (identify on site plan)

Land Use Slope (%) Surface Stones

Vegetation

Landform

Position on landscape (sketch on the back)

Distances from:

Open Water Body	feet	Drainage way	feet
Possible Wet Area	feet	Property Line	feet
Drinking Water Well	feet	Other	

DEEP OBSERVATION HOLE LOG*

Depth from Surface (Inches)	Soil Horizon	Soil Texture (USDA)	Soil Color (Munsell)	Soil Mottling	Other (Structure, Stones, Boulders, Consistency, % Gravel)

* MINIMUM OF 2 HOLES REQUIRED AT EVERY PROPOSED DISPOSAL AREA

Parent Material (geologic) _____ Depth to Bedrock: _____

Depth to Groundwater: Standing Water in the Hole: _____ Weeping from Pit Face: 22"

Estimated Seasonal High Ground Water: 20"

FORM 12 - PERCOLATION TEST

Location Address or Lot No. 344 Flat Hills Road

COMMONWEALTH OF MASSACHUSETTS

, Massachusetts

Percolation Test*

Date: Time:

Observation Hole #	2	#1
Depth of Perc	38"	
Start Pre-soak	8:45	
End Pre-soak	9:00	
Time at 12"	9:00	
Time at 9"	9:23	
Time at 6"	9:58	
Time (9"-6")	35	
Rate Min./Inch	11/1/2 min. 15	

Seeps at 22"
OXIDES AT 20"

* Minimum of 1 percolation test must be performed in both the primary area AND reserve area.

Site Passed ☐ Site Failed ☐

Performed By: Al Weiss

Witnessed By: Mike Lombard

Comments: Wet Soils from 5" of Rain Last 80 Feet possible Wet land Subject to determination Conservation (pete Wentworth office?)

DEP

DEP APPROVED FORM - 12/07/95

515 East Pleasant
Julie Calahan
323-4916

Location Address or Lot No. _____

COMMONWEALTH OF MASSACHUSETTS

, Massachusetts

Percolation Test*		
Date:		Time:
Observation Hole #		
Depth of Perc		
Start Pre-soak		
End Pre-soak		
Time at 12"		
Time at 9"		
Time at 6"		
Time (9"-6")		
Rate Min./Inch		

* Minimum of 1 percolation test must be performed in both the primary area AND reserve area.

Site Passed ☐ Site Failed ☐

Performed By: _____

Witnessed By: _____

Comments: _____

DONALD J. ALLISON
EDITH ADAMS ALLISON
689 NORTHEAST ST. PH. 413-256-8118
AMHERST, MA 01002

5-39/110

2011

Date 6/18/98

Pay to the order of Town of Amherst $ 160.00

One hundred Sixty and — 00/100 Dollars

Security features included. Details on back.

BankBoston 4933

For

Donald J Allison

MP

⑆011000390⑆ 162 19290⑈ 2011

6-18-98
Rec + Plans for 344 Flat Hills Rd

TOWN OF AMHERST
HEALTH PERMITS/ INSPECTION SERVICES

№ 0401

Received of Donald J. & EDITH Adams Allison of 689 Northeast — ST
Name Address

For Property Located at: 344 Flat Hills Road
Street Address Owner

HEA009 Bakery R6510 443508		**HEA014** Retail Store Permit R6510 443514	
HEA001 Bed & Breakfast R6510 443516		**HEA015** Sanitary Code Booklets R6510 432305	
HEA025 Burial Permits R6510 443517		**HEA016** Septic Tank Permit-Installers R6510 443511	
HEA002 Catering License R6510 443507		**HEA017** Septic Tank Permit-Private R6510 443510	D 60.00
HEA003 Food Handler R6510 443515		**HEA018** Septic Tank Reinspection Fee R6510 432301	
HEA004 Frozen Desserts R6510 443501		**HEA026** Smoking & Tobacco Reg. Violations R6510 443518	
HEA024 Funeral Director License R6510 443502		**HEA019** Sub-Division Review Fee R6510 432306	
HEA005 Health Dept. Housing Insp. R6510 432302		**HEA012** Swimming Pool Permits R6510 443512	
HEA006 Massage Therapy License R6510 443504		**HEA023** TB Clinic R6510 432303	
HEA007 Milk & Cream License R6510 443500		**HEA020** Tanning License R6510 443509	
HEA008 Motel License R6510 443506		**HEA022** Tobacco License R6510 443505	
HEA010 Removal of Offal R6510 443513		**HEA**	
HEA011 Percolation Test Fees R6510 432300	D 100 00	**HEA**	
HEA013 Recreation Camp License. R6510 443503			

TOTAL FEE: 160 00

Inspection Services/Health Department

6-18-1998
Date

Cr Full

TOWN OF AMHERST
MISC CASH RECEIPTS
Date / Time : 06/18/98 11:43:05
Payment : $60.00
Receipt # : 73231
Check/Credit Card #: 2011
Clerk : masloski
Paid by : D & E ALLISON 401

Must be validated by the Collector's Office to be considered paid.

White - Applicant *Yellow - Collector* *Pink - Accounting* *Gold - Health/Inspections*

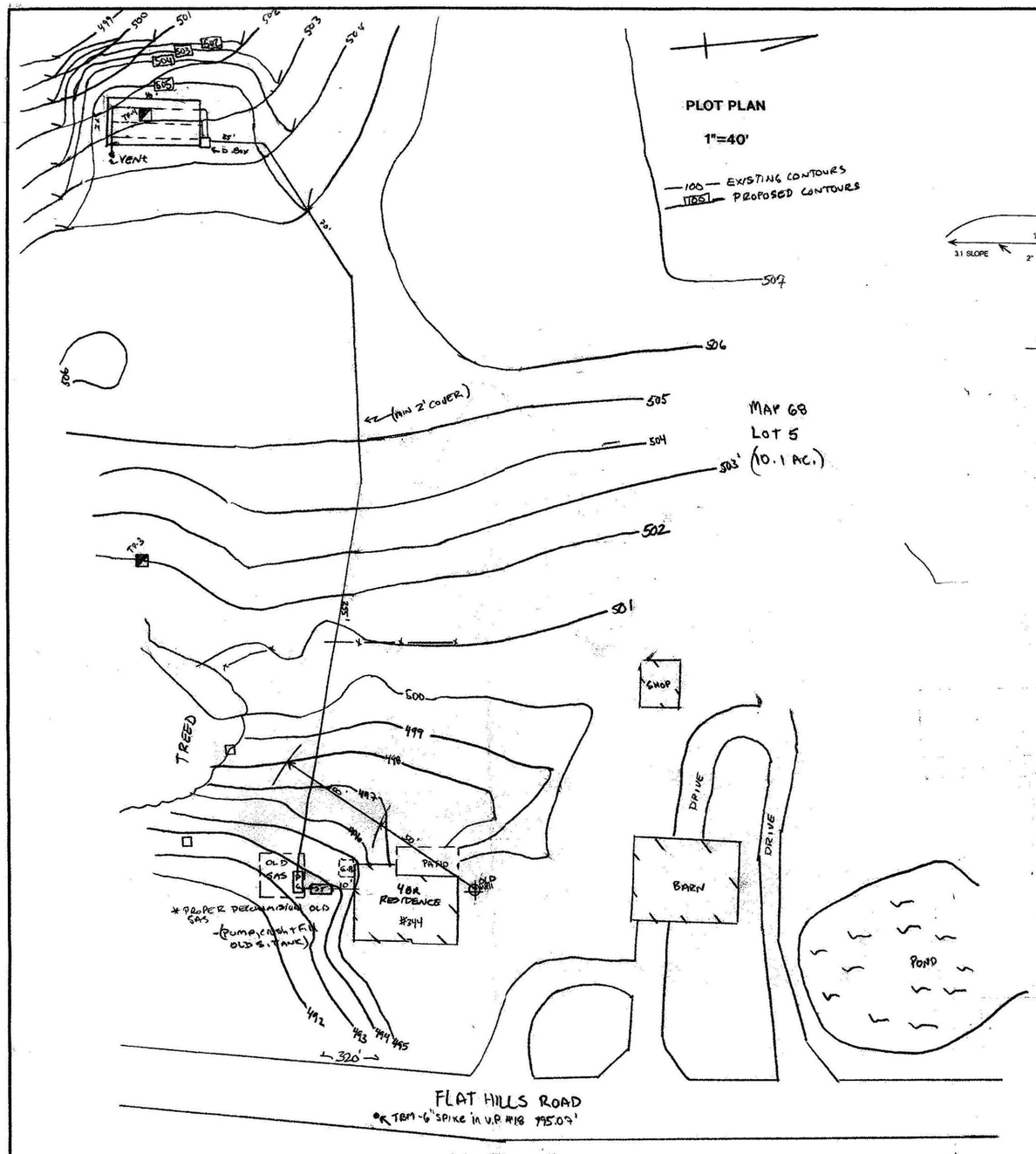

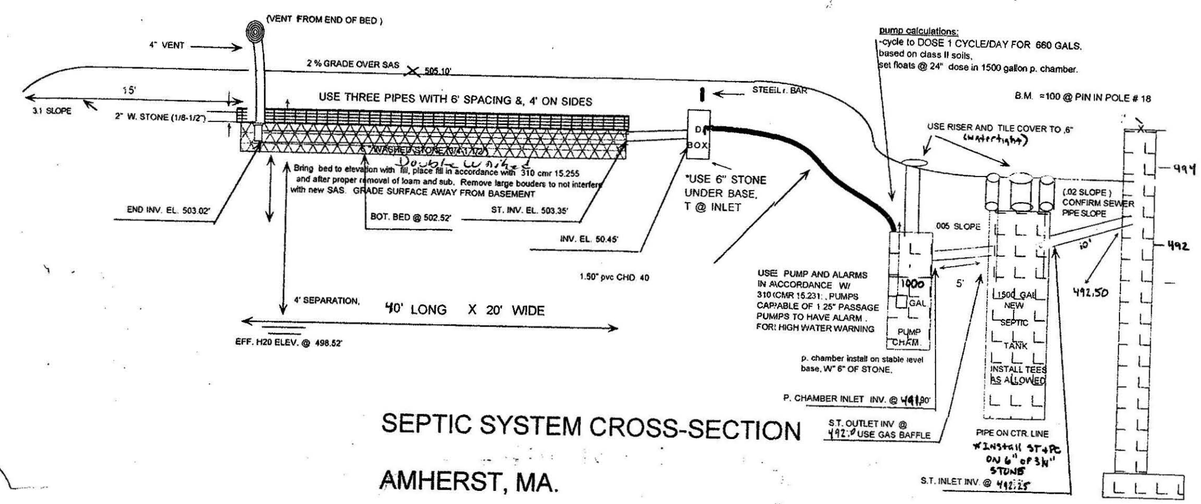

SEPTIC SYSTEM CROSS-SECTION

AMHERST, MA.

TEST PIT LOGS

TP-4 EL. 502.85'	TP- EL.
0-8" FINE LOAMY SAND, FRIABLE (2.5Y3/3)	A "
8-22" FINE LOAMY SAND, FRIABLE (2.5Y 5/4)	BW "
32-80" SLIGHTLY FIRM SANDY TILL , 10% STONES AND COBBLES (2.5Y 5/3)	C1 "
EOP 120" TP-4 ,	EOP
ESHWT= 52" =498.52' @ TP-4	ESHWT =" =.'
NA" SEEPS	NA.
NA" STATIC H20	NA.
120" BEDROCK	"
52" OXIDES (10 YR 5/6 & 5Y 4/3)	"

TYPICAL D. BOX (WATERTIGHT)

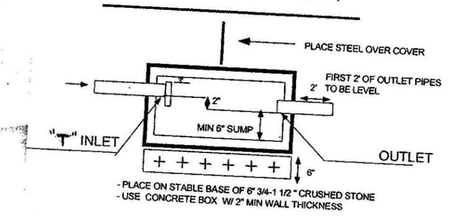

DESIGN NOTES:

1. 4 BR. x 110 gal/day = 440 gal./day,
2. Use one Leach FIELD 20' wide x 40' LONG W/6" stone below invert.
   Bot. Area: 20' wide x 40' long = 800 sf.
   Side Area: NA.
   Tot. Area: 800 sf x 0.60 gal.sf. = 480 gal./day.
3. NO GARBAGE DISPOSAL ALLOWED)
4. ALL D. BOX OUTLET PIPES LEVEL FOR 2', ALL PERF./PIPE MIN. SDR . 35.
5. NO WELLS NOTED WITHIN 100 FEET OF SAS SYSTEM
6. NO WETLANDS NOTED WITHIN 100 FEET OF SYSTEM

7. PRE & POST CONTOURS NOTED AS NECESSARY.
8. RESERVE AREA: NOTED
9. SLOPE CALCS NOT APPLIC .(SEE CONTOURS) 3:1 SLOPE MET.
10.. 2% MIN. SLOPE OVER SAS., SLOPE FINAL GRADE AWAY FROM SILL FOR RUNOFF

11.. USE new 1500 GAL. S. TANKS AND NEW 1500 + GAL PUMP CHAMBERS W/ PROPER FLOATS AND ALARMS PER 310 CMR. 15.231.
12.. INSTALL TEES IN S. TANK , 1 " AT INLET, 1 " AT OUTLET
PERC TEST BY A.WEISS.., ON 8/26/98,
-CLASS II SOILS IDENTIFIED. (SANDY LOAM) FOR LOADING FACTOR
-CLASS II SOIL, @ 0.60 GAL/SF., BM=100 @ PIN IN POLE # 18

LEACH FIELD DIAGRAM (NTS)

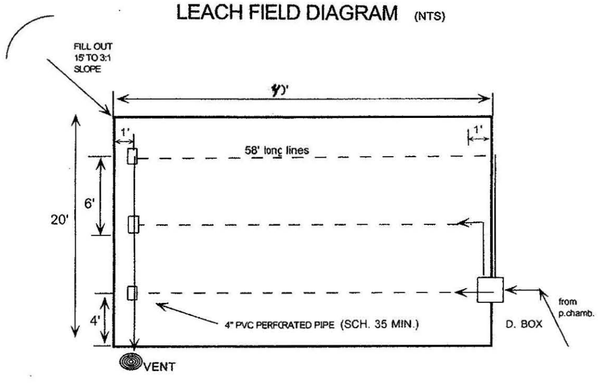

TYPICAL 2 CHAMBER S. TANK OR EQUIV. (WATERTIGHT)

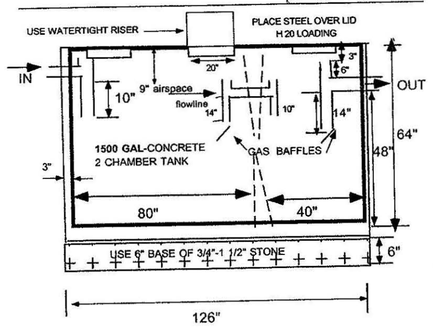

COMMONWEALTH OF MASSACHUSETTS
ALAN E. WEISS
REG #9333
REGISTERED SANITARIAN

SEPTIC REPAIR PLAN FOR TODD RES.
344 FLAT HILLS ROAD AMHERST

SCALE: NOTED	APPROVED BY: AW	DRAWN BY AW
DATE: 9/13/99		REVISED

COLD SPRING ENVIRONMENTAL,INC

DRAWING NUMBER 98-938-0618A

CHARRETTE PRO-FORM 920PF PRINTED ON 20LB CHARPRINT VELLUM