30 BRIDLE PATH

40 Stagecoach Rd

April 2013
INVOICE

AMHERST PUBLIC HEALTH DEPARTMENT

Bangs Community Center
70 Boltwood Walk
Amherst, MA 01002

DATE: April 30, 2013

TO Luca Grillo & Jennifer Barbour
30 Bridlepath
Amherst, MA, 01002

RE: Invoice for **Title 5 Witness Fee**
30 Bridlepath Lane, Amherst 01002

Services provided by **Edmund Smith, Health Inspector**

PAYMENT TERMS: Due Upon Receipt

QUANTITY	DESCRIPTION	UNIT PRICE	LINE TOTAL
1.00	Title 5 Witness (pass)	$ 200.00	$ 200.00
	please remit by check payable to: Town of Amherst		
	thank you - Ed Smith		
		SUBTOTAL	$ 200.00
		SALES TAX	
		TOTAL	$ 200.00

Application: 18383
Batch: 6690

CUST NAME
4 BOLTWOOD AVENUE
05/31/13
CITY, ST, ZIP

***TOWN OF A TOWN HAL
AMHERST M REFERENCE
DATE/TIME 13:26

CUST NAME

0
DEPT

DE HEA058 TITLE V WI 200.

RECPT TOTAL

200.00 AMOUNT
JENNIFER G QUA CHECK 374

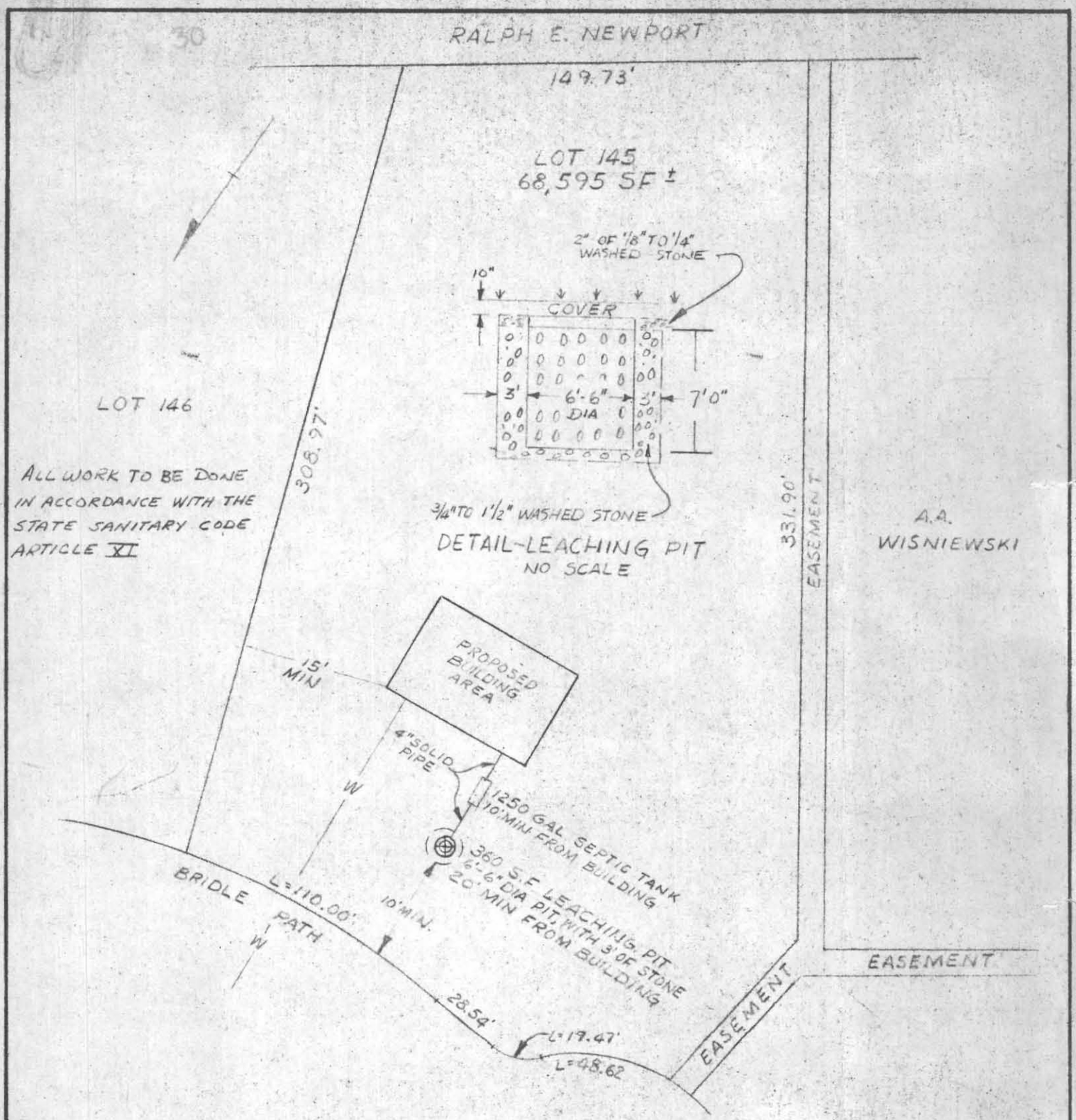

PLAN OF PROPOSED SEWAGE DISPOSAL SYSTEM FOR LOT No 145
ECHO HILL NORTH
AMHERST, MASS
PREPARED FOR
GERALD GATES

Almer Huntley, Jr.

SCALE: 1" = 50'
DWG: J.M.G.
DATE: 12-31-73

ALMER HUNTLEY, JR. & ASSOCIATES, INC.
REGISTERED LAND SURVEYORS & CIVIL ENGINEERS
238 BRIDGE STREET
NORTHAMPTON, MASS.

PERMITS/INSP PAYMENT RECPT#: 9083453
TOWN OF AMHERST
TOWN HALL
4 BOLTWOOD AVENUE
AMHERST MA 01002

DATE: 04/29/09 TIME: 13:20
CLERK: courteman DEPT:

PAID BY:
PAYMENT METH: CHECK 1233

REFERENCE: A

AMT TENDERED: 200.00
AMT APPLIED: 200.00
CHANGE: .00

SITE ADDRESS: 30 BRIDLE PATH

FEES:
HEA058 TITLE V WITNESS 200.00

TOTAL PAID: 200.00

Wed 4-29-09

Title 5 30 Bridle Path.

No disposal

Town water.

No sump.

Last pumped - 6 yrs ago.

Laundry feeds into.

Janice Fisher

pd $200 #1233

EB + GC

by Clean Septics

BOARD OF HEALTH, AMHERST, MASSACHUSETTS #30

APPLICATION FOR DISPOSAL WORKS CONSTRUCTION PERMIT

No. 74-15 Date Jan. 15, 1974 Fee $3.00 Date Rec'd. 1/15/74 By DKP

Application is hereby made for a permit to Construct (✓) or Repair ( ) an Individual Sewage Disposal System at:

Location—Address 30 BRIDLE PATH or Lot No. 145

Owner GERRY GATES Address

Contractor Tomlinson Inc Address 5 East Pleasant

Type of Building Dimensions Size Lot 68,595

Dwelling—No. of Bedrooms 4 Expansion Attic ( ) Garbage Grinder (✓)

Other No. of persons Showers ( )

Other fixtures

Town Water? YES Type of Well

Design Flow 50 gallons per person per day. Total daily flow gallons

Septic Tank—Liquid capacity 1250 gallons Dimensions: L 10'-0" W 5'-4" D 4'-10"

Disposal Trench—No. Width Total Length Total leaching area sq. ft.

Disposal Bed—No. 1 Diameter 12'-6" Depth below inlet 6'-0" Total leaching area 360 sq. ft.

Dry Well—No. Diameter Depth below inlet Dimensions: x x

Other: Distribution box ( ) No. Dosing tank ( )

(Depth of Soil Line Below finished grade at foundation)

Percolation Test Results Performed by HUNTLEY ASSOC'S. Date 12-1-73

Test Pit No. 1 1.07 minutes per inch Depth of Test Pit 3'-6"

Test Pit No. 2 — minutes per inch Depth of Test Pit 8'-6"

Description of Soil SAND Depth to Ground Water NONE

Will *disposal area* be filled? Cut down?

(On reverse side or separate sheet, show plot plan with building. Include dimensions, distances from all boundaries. Show location of wells, streams, ledge, large trees, etc.)

AGREEMENT: The undersigned agrees to construct the aforedescribed individual sewage disposal system in accordance with the provisions of Article XI of the Sanitary Code and regulations of the Amherst Board of Health. The undersigned further agrees not to place the system in operation until a Certificate of Compliance has been issued by this board of health.

Tomlinson Inc. Owner or builder per. 1/15/74 date

Application Approved by C E Dahl 1-17-74 date

Application Disapproved *for the following reasons:*

COMMONWEALTH OF MASSACHUSETTS ALMER M. HUNTLEY, JR. 9419 REGISTERED PROFESSIONAL ENGINEER

Almer Huntley, Jr.

BOARD OF HEALTH, AMHERST, MASSACHUSETTS

CERTIFICATE OF COMPLIANCE

THIS IS TO CERTIFY, That the individual Sewage Disposal System installed ( ) or repaired ( ) by _____ at _____ has been constructed in accordance with the provisions of
INSTALLER

Article XI of the State Sanitary Code as described in the application for Disposal Works Construction Permit No. _____ dated _____

The issuance of this certificate shall not be construed as a guarantee that the system will function satisfactorily.

DATE _____ Inspector _____

BOARD OF HEALTH, AMHERST, MASSACHUSETTS

DISPOSAL WORKS CONSTRUCTION PERMIT

No. 74-15

Permission is hereby granted Tomlinson, Inc. to construct (X) or repair ( ) an Individual Sewage Disposal System at Lot #145, Bridle Path as shown on the application for Disposal Works Construction Permit No. 74-15

This permit is issued with the understanding that future alterations or additions will be made if necessary. This permit shall not be construed as permission to create or maintain any sewage nuisance and in the issuance of this permit the Board of Health assumes no responsibility for the future operation or maintenance of the system.

DATE 1-17-74

C E Dahl
Board of Health

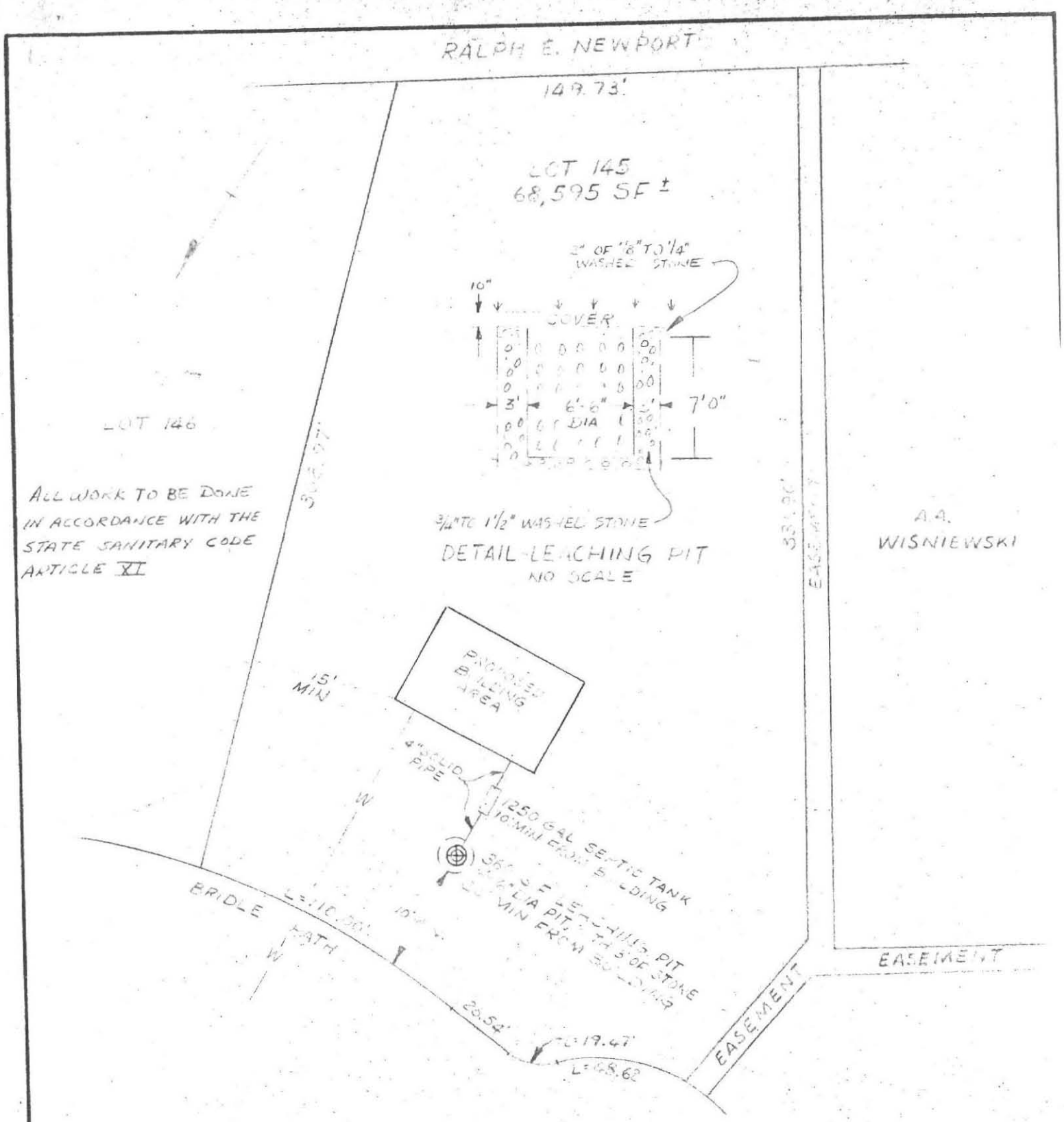

PLAN OF PROPOSED SEWAGE
DISPOSAL SYSTEM FOR LOT No 145
ECHO HILL NORTH
AMHERST, MASS
PREPARED FOR
GERALD GATES

Almer Huntley, Jr.

SCALE: 1" = 50'
DWG: J.M.G.
DATE: 12-31-73

ALMER HUNTLEY, JR. & ASSOCIATES, INC.
REGISTERED LAND SURVEYORS & CIVIL ENGINEERS

BOARD OF HEALTH

TOWN OF AMHERST, MASSACHUSETTS

Important Information Regarding Your Private Sewage Disposal System

DISPLAY THIS DOCUMENT IN A PROMINENT PLACE

Owner (Tomlinson) GERRY GATES Address lot #145 BRIDLE PATH

Installer KARLS ENC. Address RIVER DR. N. Hadley

Date Installation Inspected and Approved 2-27-75

Description of System: Tank Capacity: 1250

Leach Field ( ) Bed ( ) Seepage Pit (X) Square Feet: 400

Garbage Grinder Yes ( ) No ( ) No. Bedrooms: ____ No. People ____

AS - BUILT PLAN:

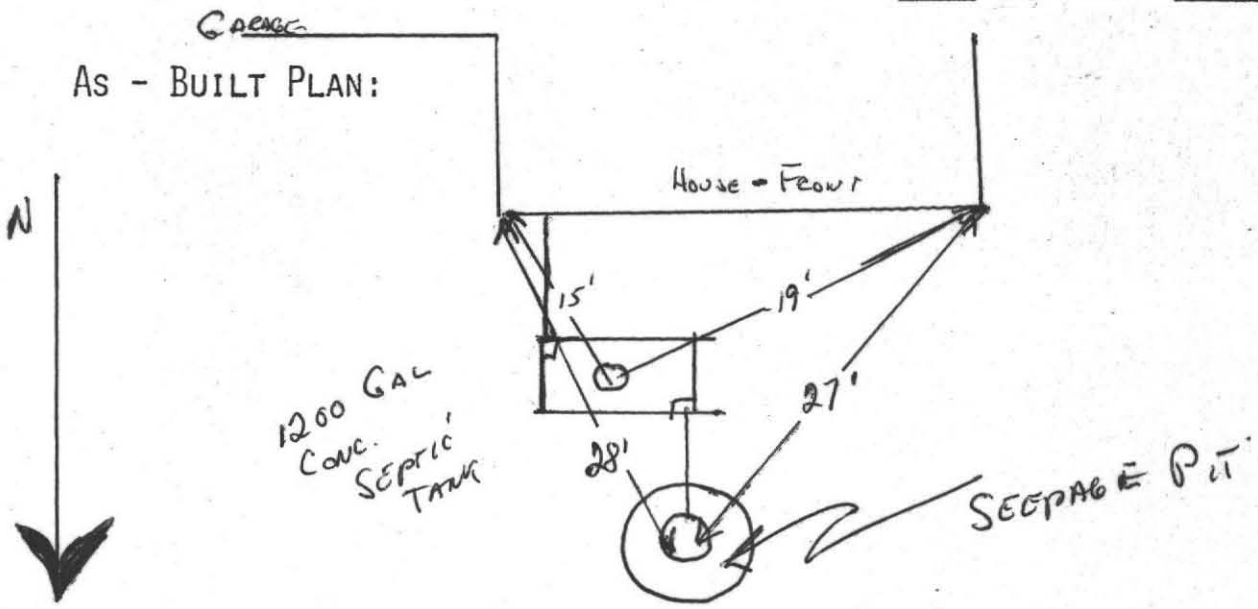

PROPER MAINTENANCE OF YOUR PRIVATE SEWAGE DISPOSAL SYSTEM

1. This system must be inspected periodically and the tank pumped out at an interval not to exceed 3 years.
2. For your protection sanitary pumpers are licensed by the Amherst Board of Health.
3. Regular pumping is crucial to avoid early failure and costly repairs of the system.
4. DO NOT dispose into the system such items as rags, string, sanitary napkins, coffee grounds as they can cause it to clog and fail.
5. Further information can be obtained by contacting your Health Department at 253-7077.

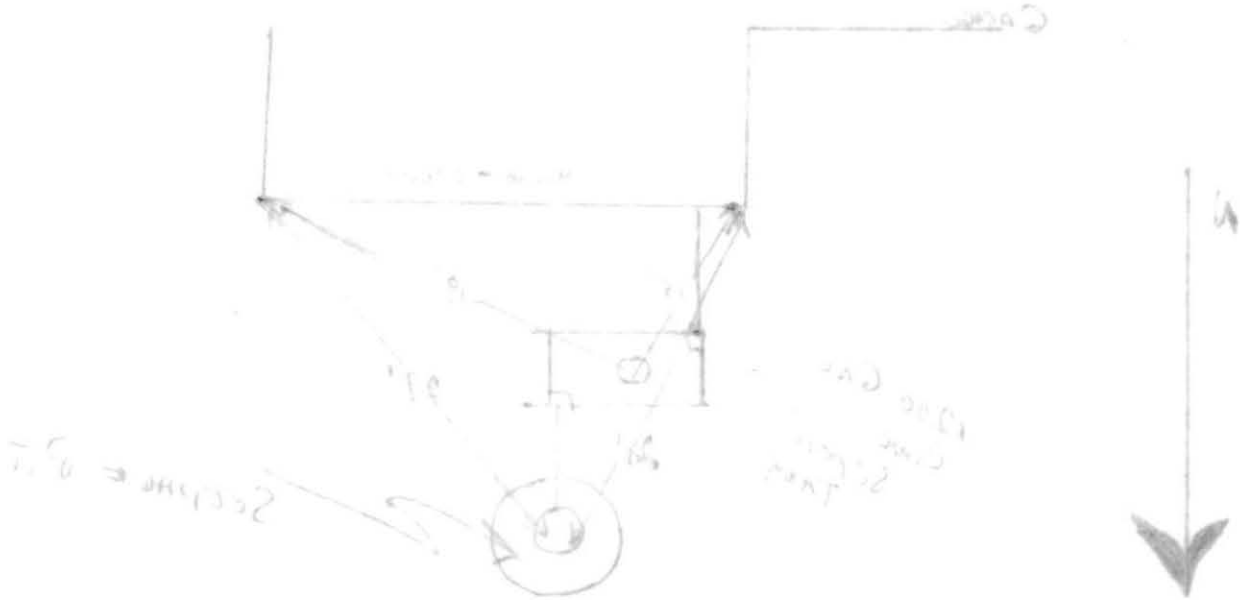

REQUESTED BY: GLENN MORTON

LOCATION: ECHO HILL (NORTH) AMHERST

MAIL ADDRESS:

DATE: 8/1/73

OBSERVER: TS, AD, JH, BL

LOT #123

OTS	2"
SILT & SAND w/ GRAVEL	2'-0"
SAND & GRAVEL	2'-0"
FINE SAND w/TRACE OF ORGANIC MATTER & COBBLES	3'-4"

7'-6"

GROUND WATER NONE

PERC RATE: 0.33 MIN/IN

LOT #142

OTS	4"
SANDY SILT	1'-0"
FINE SAND & SILT	2'-0"
OXIDE LAYER OF SAND	1'-0"
VERY FINE SAND	4'-8"

9'-0"

GROUND WATER NONE

PERC RATE: 1.7 MIN/IN

LOT #143

OTS	4"
SILT & SOME SAND	3'-0"
VERY FINE SAND	2'-0"
FINE OXIDE SAND & SILT	4'-2"

9'-6"

GROUND WATER 9'-0"

PERC RATE: 4.0 MIN/IN

LOT #105 ✓

OTS	4"
SILT & SAND	1'-6"
FINE SAND & SILT	2'-0"
OXIDE SAND	6"
VERY FINE SAND	

8'-6"

GROUND WATER NONE

PERC RATE: 1.7 MIN/IN

ALMER HUNTLEY, JR. & ASSOCIATES, INC.
REGISTERED LAND SURVEYORS & CIVIL ENGINEERS
238 BRIDGE STREET
NORTHAMPTON, MASS.

COMMONWEALTH OF MASSACHUSETTS
EXECUTIVE OFFICE OF ENVIRONMENTAL AFFAIRS
DEPARTMENT OF ENVIRONMENTAL PROTECTION
ONE WINTER STREET, BOSTON MA 02108 (617) 292-5500

TRUDY COXE
Secretary

ARGEO PAUL CELLUCCI
Governor

DAVID B. STRUHS
Commissioner

SUBSURFACE SEWAGE DISPOSAL SYSTEM INSPECTION FORM
PART A
CERTIFICATION

Property Address: 30 BRIDGE PATH, Amherst. AMHERST
Name of Owner PAT Niedvielski
Address of Owner:
Date of Inspection: 12/8/99
Name of Inspector: (Please Print) Alan E. Weiss, R.S.
I am a DEP approved system inspector pursuant to Section 15.340 of Title 5 (310 CMR 15.000)
Company Name: Cold Spring Environmental, Inc.
Mailing Address: 350 Old Enfield Rd., Belchertown, MA 01007
Telephone Number: 413-323-5957

CERTIFICATION STATEMENT

I certify that I have personally inspected the sewage disposal system at this address and that the information reported below is true, accurate and complete as of the time of inspection. The inspection was performed based on my training and experience in the proper function and maintenance of on-site sewage disposal systems. The system:

✓ Passes
___ Conditionally Passes
___ Needs Further Evaluation By the Local Approving Authority
___ Fails

COMMONWEALTH OF MASSACHUSETTS
ALAN E. WEISS
REG. #933
REGISTERED SANITARIAN

Inspector's Signature: [signature] **Date:** 12/8/99

The System Inspector shall submit a copy of this inspection report to the Approving Authority (Board of Health or DEP) within thirty (30) days of completing this inspection. If the system is a shared system or has a design flow of 10,000 gpd or greater, the inspector and the system owner shall submit the report to the appropriate regional office of the Department of Environmental Protection. The original should be sent to the system owner and copies sent to the buyer, if applicable, and the approving authority.

NOTES AND COMMENTS

- Each tank had 6.0' of Liquid. w/ .0' of Freeboard. Technically not in failure. AT INSPECTION TIME.

- NOTE: OLD SYSTEM AND ONLY IN USE BY 1 PERSON AT TIME INSPECTION.

* Recommend: that gutter drain not run direct over Septic tank.

revised 9/2/98

SUBSURFACE SEWAGE DISPOSAL SYSTEM INSPECTION FORM
PART A
CERTIFICATION (continued)

Property Address: 30 Bridle path
Owner: Niedvielski
Date of Inspection: 12/8/99

INSPECTION SUMMARY: Check ***A, B, C, or D***:

A. SYSTEM PASSES:

✓ I have not found any information which indicates that any of the failure conditions described in 310 CMR 15.303 exist. Any failure criteria not evaluated are indicated below.

COMMENTS: LEACH TANK NOT IN TECHNICAL FAILURE; OLD SYSTEM ONLY IN USE BY ONE PERSON AT INSPECTION

B. SYSTEM CONDITIONALLY PASSES:

_____ One or more system components as described in the "Conditional Pass" section need to be replaced or repaired. The system, upon completion of the replacement or repair, as approved by the Board of Health, will pass.

Indicate yes, no, or not determined (Y, N, or ND). Describe basis of determination in all instances. If "not determined", explain why not.

___ The septic tank is metal, unless the owner or operator has provided the system inspector with a copy of a Certificate of Compliance (attached) indicating that the tank was installed within twenty (20) years prior to the date of the inspection; or the septic tank, whether or not metal, is cracked, structurally unsound, shows substantial infiltration or exfiltration, or tank failure is imminent. The system will pass inspection if the existing septic tank is replaced with a complying septic tank as approved by the Board of Health.

___ Sewage backup or breakout or high static water level observed in the distribution box is due to broken or obstructed pipe(s) or due to a broken, settled or uneven distribution box. The system will pass inspection if (with approval of the Board of Health).

- _____ broken pipe(s) are replaced
- _____ obstruction is removed
- _____ distribution box is levelled or replaced

___ The system required pumping more than four times a year due to broken or obstructed pipe(s). The system will pass inspection if (with approval of the Board of Health):

- _____ broken pipe(s) are replaced
- _____ obstruction is removed

SUBSURFACE SEWAGE DISPOSAL SYSTEM INSPECTION FORM
PART A
CERTIFICATION (continued)

Property Address: 30 Bridle Path.
Owner: Niedwiecki
Date of Inspection: 12/8/99

C. FURTHER EVALUATION IS REQUIRED BY THE BOARD OF HEALTH:

_____ Conditions exist which require further evaluation by the Board of Health in order to determine if the system is failing to protect the public health, safety and the environment.

1) SYSTEM WILL PASS UNLESS BOARD OF HEALTH DETERMINES IN ACCORDANCE WITH 310 CMR 15.303 (1)(b) THAT THE SYSTEM IS NOT FUNCTIONING IN A MANNER WHICH WILL PROTECT THE PUBLIC HEALTH AND SAFETY AND THE ENVIRONMENT:

__ Cesspool or privy is within 50 feet of surface water
__ Cesspool or privy is within 50 feet of a bordering vegetated wetland or a salt marsh.

2) SYSTEM WILL FAIL UNLESS THE BOARD OF HEALTH (AND PUBLIC WATER SUPPLIER, IF ANY) DETERMINES THAT THE SYSTEM IS FUNCTIONING IN A MANNER THAT PROTECTS THE PUBLIC HEALTH AND SAFETY AND THE ENVIRONMENT:

__ The system has a septic tank and soil absorption system (*SAS*) and the SAS is within 100 feet of a surface water supply or tributary to a surface water supply.
__ The system has a septic tank and soil absorption system and the SAS is within a Zone I of a public water supply well.
__ The system has a septic tank and soil absorption system and the SAS is within 50 feet of a private water supply well.
__ The system has a septic tank and soil absorption system and the SAS is less than 100 feet but 50 feet or more from a private water supply well, unless a well water analysis for coliform bacteria and volatile organic compounds indicates that the well is free from pollution from that facility and the presence of ammonia nitrogen and nitrate nitrogen is equal to or less than 5 ppm. Method used to determine distance _____ (approximation not valid).

3) OTHER

__ _____

SUBSURFACE SEWAGE DISPOSAL SYSTEM INSPECTION FORM
PART A
CERTIFICATION (continued)

Property Address: 30 BRIDLE PATH
Owner: Niedwelski
Date of Inspection: 12/8/99

D. SYSTEM FAILS:
You must indicate either "Yes" or "No" to each of the following:

_____ I have determined that one or more of the following failure conditions exist as described in 310 CMR 15.303. The basis for this determination is identified below. The Board of Health should be contacted to determine what will be necessary to correct the failure.

Yes	No	
___	___	Backup of sewage into facility or system component due to an overloaded or clogged SAS or cesspool.
___	___	Discharge or ponding of effluent to the surface of the ground or surface waters due to an overloaded or clogged SAS or cesspool.
___	___	Static liquid level in the distribution box above outlet invert due to an overloaded or clogged SAS or cesspool.
___	___	Liquid depth in cesspool is less than 6" below invert or available volume is less than 1/2 day flow.
___	___	Required pumping more than 4 times in the last year **NOT** due to clogged or obstructed pipe(s). Number of times pumped ___.
___	___	Any portion of the Soil Absorption System, cesspool or privy is below the high groundwater elevation.
___	___	Any portion of a cesspool or privy is within 100 feet of a surface water supply or tributary to a surface water supply.
___	___	Any portion of a cesspool or privy is within a Zone I of a public well.
___	___	Any portion of a cesspool or privy is within 50 feet of a private water supply well.
___	___	Any portion of a cesspool or privy is less than 100 feet but greater than 50 feet from a private water supply well with no acceptable water quality analysis. If the well has been analyzed to be acceptable, attach copy of well water analysis for coliform bacteria, volatile organic compounds, ammonia nitrogen and nitrate nitrogen.

E. LARGE SYSTEM FAILS:
You must indicate either "Yes" or "No" to each of the following:
The following criteria apply to large systems in addition to the criteria above:

_____ The system serves a facility with a design flow of 10,000 gpd or greater (Large System) and the system is a significant threat to public health and safety and the environment because one or more of the following conditions exist:

Yes	No	
___	___	the system is within 400 feet of a surface drinking water supply
___	___	the system is within 200 feet of a tributary to a surface drinking water supply
___	___	the system is located in a nitrogen sensitive area (Interim Wellhead Protection Area - IWPA) or a mapped Zone II of a public water supply well)

The owner or operator of any such system shall upgrade the system in accordance with 310 CMR 15.304(2). Please consult the local regional office of the Department for further information.

SUBSURFACE SEWAGE DISPOSAL SYSTEM INSPECTION FORM
PART B
CHECKLIST

Property Address: 30 BRIDLE PATH
Owner: Niedulski
Date of Inspection: 12/8/99

Check if the following have been done: You must indicate either "Yes" or "No" as to each of the following:

Yes	No	
✓		Pumping information was provided by the owner, occupant, or Board of Health.
✓		None of the system components have been pumped for at least two weeks and the system has been receiving normal flow rates during that period. Large volumes of water have not been introduced into the system recently or as part of this inspection.
✓		As built plans have been obtained and examined. Note if they are not available with N/A.
✓		The facility or dwelling was inspected for signs of sewage back-up.
✓		The system does not receive non-sanitary or industrial waste flow.
✓		The site was inspected for signs of breakout.
✓		All system components, excluding the Soil Absorption System, have been located on the site.
✓		The septic tank manholes were uncovered, opened, and the interior of the septic tank was inspected for condition of baffles or tees, material of construction, dimensions, depth of liquid, depth of sludge, depth of scum.
		The size and location of the Soil Absorption System on the site has been determined based on:
✓		Existing information. For example, Plan at B.O.H.
✓		Determined in the field (if any of the failure criteria related to Part C is at issue, approximation of distance is unacceptable) [15.302(3)(b)]
✓		The facility owner (and occupants, if different from owner) were provided with information on the proper maintenance of SubSurface Disposal Systems.

revised 9/2/98

SUBSURFACE SEWAGE DISPOSAL SYSTEM INSPECTION FORM
PART C
SYSTEM INFORMATION

Property Address: 30 BRIDLE PATH
Owner: NIEDUIELSKI
Date of Inspection: 12/8/99

FLOW CONDITIONS

RESIDENTIAL:
Design flow: 440 g.p.d./bedroom.
Number of bedrooms (design): 4 Number of bedrooms (actual): (5?)
Total DESIGN flow 440?
Number of current residents: 1
Garbage grinder (yes or no): ___
Laundry (separate system) (yes or no): N ; If yes, separate inspection required
Laundry system inspected (yes or no)
Seasonal use (yes or no): N
Water meter readings, if available (last two year's usage (gpd): —
Sump Pump (yes or no): N
Last date of occupancy: 1 person

COMMERCIAL/INDUSTRIAL:
Type of establishment: N/A
Design flow: _____ gpd (Based on 15.203)
Basis of design flow _____
Grease trap present: (yes or no)___
Industrial Waste Holding Tank present: (yes or no)___
Non-sanitary waste discharged to the Title 5 system: (yes or no)___
Water meter readings, if available: _____
Last date of occupancy: _____

OTHER: (Describe) _____
Last date of occupancy: _____

GENERAL INFORMATION

PUMPING RECORDS and source of information:
Unknown last Pumped
System pumped as part of inspection: (yes or no)___
If yes, volume pumped: 1250 gallons
Reason for pumping: KARL'S PUMPED

TYPE OF SYSTEM
✓ Septic tank/distribution box/soil absorption system
_____ Single cesspool
_____ Overflow cesspool
_____ Privy
_____ Shared system (yes or no) (if yes, attach previous inspection records, if any)
_____ I/A Technology etc. Attach copy of up to date operation and maintenance contract
_____ Tight Tank _____ Copy of DEP Approval

Other _____

APPROXIMATE AGE of all components, date installed (if known) and source of information: 24 yrs.

Sewage odors detected when arriving at the site: (yes or no) N

SUBSURFACE SEWAGE DISPOSAL SYSTEM INSPECTION FORM
PART C
SYSTEM INFORMATION (continued)

Property Address: 30 BRIDLE PATH
Owner: NIEDWIELSKI
Date of Inspection: 12/8/99

BUILDING SEWER:
(Locate on site plan)

Depth below grade: 16"
Material of construction: __ cast iron ✓ 40 PVC __ other (explain)

Distance from private water supply well or suction line 10 ft
Diameter 4" ø
Comments: (condition of joints, venting, evidence of leakage, etc.)

SEPTIC TANK: ✓
(locate on site plan)

Depth below grade: 16"
Material of construction: ✓ concrete __metal __Fiberglass __Polyethylene __other(explain)

If tank is metal, list age ___ Is age confirmed by Certificate of Compliance ___ (Yes/No)

Dimensions: 8.5' x 4.5 x 4.5'
Sludge depth: 15"
Distance from top of sludge to bottom of outlet tee or baffle: 30"
Scum thickness: 10"
Distance from top of scum to top of outlet tee or baffle: 5"
Distance from bottom of scum to bottom of outlet tee or baffle: 4"
How dimensions were determined: Measured.

Comments:
(recommendation for pumping, condition of inlet and outlet tees or baffles, depth of liquid level in relation to outlet invert, structural integrity, evidence of leakage, etc.) Baffles built in S.Tank OK.

GREASE TRAP:____
(locate on site plan)

Depth below grade:____
Material of construction: __concrete __metal __Fiberglass __Polyethylene __other(explain)

Dimensions:_____
Scum thickness:_____
Distance from top of scum to top of outlet tee or baffle:_____
Distance from bottom of scum to bottom of outlet tee or baffle:_____
Date of last pumping: _____

Comments:
(recommendation for pumping, condition of inlet and outlet tees or baffles, depth of liquid level in relation to outlet invert, structural integrity, evidence of leakage, etc.)

SUBSURFACE SEWAGE DISPOSAL SYSTEM INSPECTION FORM
PART C
SYSTEM INFORMATION (continued)

Property Address: 30 BRIDLE PATH
Owner: NIEDVIELSKI
Date of Inspection: 12/9/99

TIGHT OR HOLDING TANK:_____ (Tank must be pumped prior to, or at time of, inspection)
(locate on site plan)

Depth below grade:____
Material of construction: __concrete __metal __Fiberglass __Polyethylene __other(explain)

Dimensions:_____
Capacity:_____ gallons
Design flow:_____ gallons/day
Alarm present_____
Alarm level:_____ Alarm in working order: Yes ___ No__
Date of previous pumping: _____
Comments:
(condition of inlet tee, condition of alarm and float switches, etc.)

DISTRIBUTION BOX:__
(locate on site plan)

Depth of liquid level above outlet invert:_____

Comments:
(note if level and distribution is equal, evidence of solids carryover, evidence of leakage into or out of box, etc.)

PUMP CHAMBER:___
(locate on site plan)

Pumps in working order: (Yes or No)_____
Alarms in working order (Yes or No)_____
Comments:
(note condition of pump chamber, condition of pumps and appurtenances, etc.)

SUBSURFACE SEWAGE DISPOSAL SYSTEM INSPECTION FORM
PART C
SYSTEM INFORMATION (continued)

Property Address: 30 BRIDLE PATH
Owner: NIEDUIELSKI
Date of Inspection: 12/9/99

SOIL ABSORPTION SYSTEM (SAS): ✓
(locate on site plan, if possible; excavation not required, location may be approximated by non-intrusive methods)

If not located, explain:
6' OF Liquid. 2' OF Freeboard.

Type:
leaching pits, number:___
leaching chambers, number: (1) 6.5' ϕ X 9.0' DEEP.
leaching galleries, number:___
leaching trenches, number, length:___
leaching fields, number, dimensions:___
overflow cesspool, number:___
Alternative system: ___
Name of Technology: ___

Comments:
(note condition of soil, signs of hydraulic failure, level of ponding, damp soil, condition of vegetation, etc.)
Technically Not in failure at time of inspection. Only 1 person using.

CESSPOOLS: ___
(locate on site plan)

Number and configuration:___
Depth-top of liquid to inlet invert:___
Depth of solids layer:___
Depth of scum layer:___
Dimensions of cesspool:___
Materials of construction:___
Indication of groundwater:___
inflow (cesspool must be pumped as part of inspection)___

Comments:
(note condition of soil, signs of hydraulic failure, level of ponding, condition of vegetation, etc.)

PRIVY: ___
(locate on site plan)

Materials of construction:___ Dimensions:___
Depth of solids:___
Comments:
(note condition of soil, signs of hydraulic failure, level of ponding, condition of vegetation, etc.)

revised 9/2/98

SUBSURFACE SEWAGE DISPOSAL SYSTEM INSPECTION FORM
PART C
SYSTEM INFORMATION (continued)

Property Address: 30 Bridle Path.
Owner: NIEDWIELSKI
Date of Inspection: 12/8/99

SKETCH OF SEWAGE DISPOSAL SYSTEM:

include ties to at least two permanent reference landmarks or benchmarks
locate all wells within 100' (Locate where public water supply comes into house)

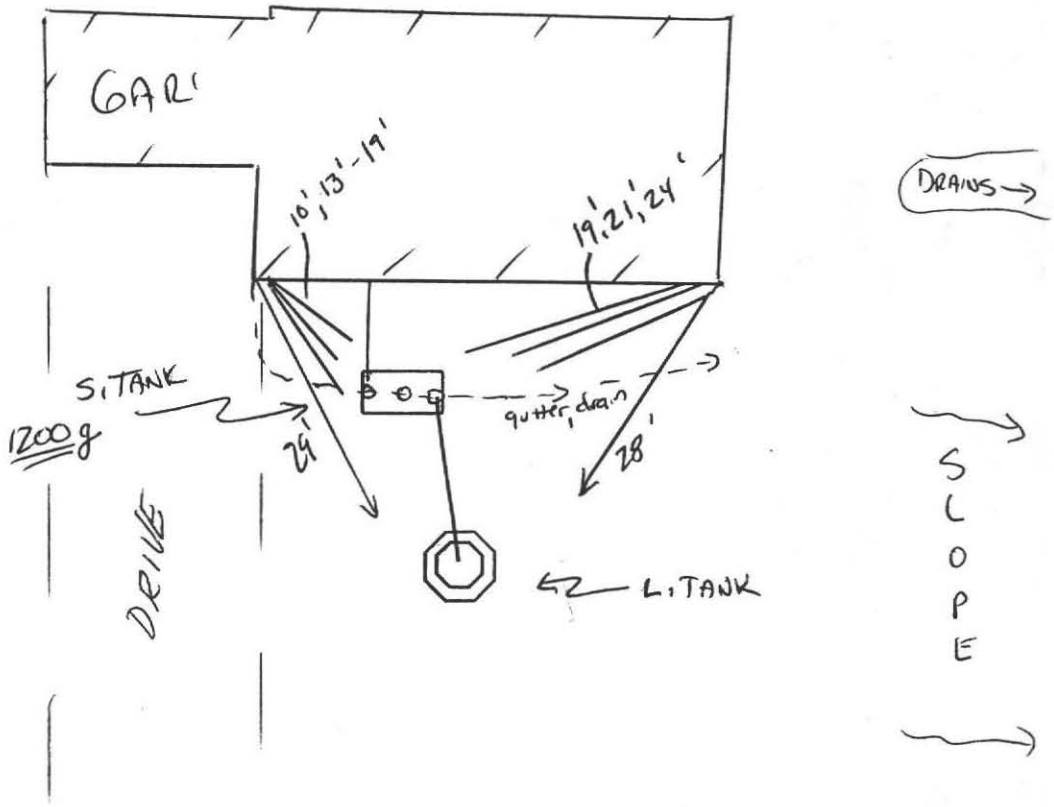

* Recommend:
gutter not drain over septic tank.

SUBSURFACE SEWAGE DISPOSAL SYSTEM INSPECTION FORM
PART C
SYSTEM INFORMATION (continued)

Property Address: 30 BRIDLE PATH
Owner: NIEDUIELSKI
Date of Inspection: 12/8/99

NRCS Report name _____
Soil Type _____
Typical depth to groundwater _____

USGS Date website visited
Observation Wells checked
Groundwater depth: Shallow _____ Moderate _____ Deep _____

SITE EXAM Slope ✓
Surface water
Check Cellar ✓
Shallow wells

Estimated Depth to Groundwater 10' Feet + 1990 Perc at next door home (g.w. at 156")

Please indicate all the methods used to determine High Groundwater Elevation:

____ Obtained from Design Plans on record

____ Observed Site (Abutting property, observation hole, basement sump etc.)

✓ Determined from local conditions

✓ Checked with local Board of health

____ Checked FEMA Maps

____ Checked pumping records

____ Checked local excavators, installers

____ Used USGS Data

Describe how you established the High Groundwater Elevation. (**Must** be completed)

Using agent lot Deep hole test, Topo + Vegitation.

revised 9/2/98

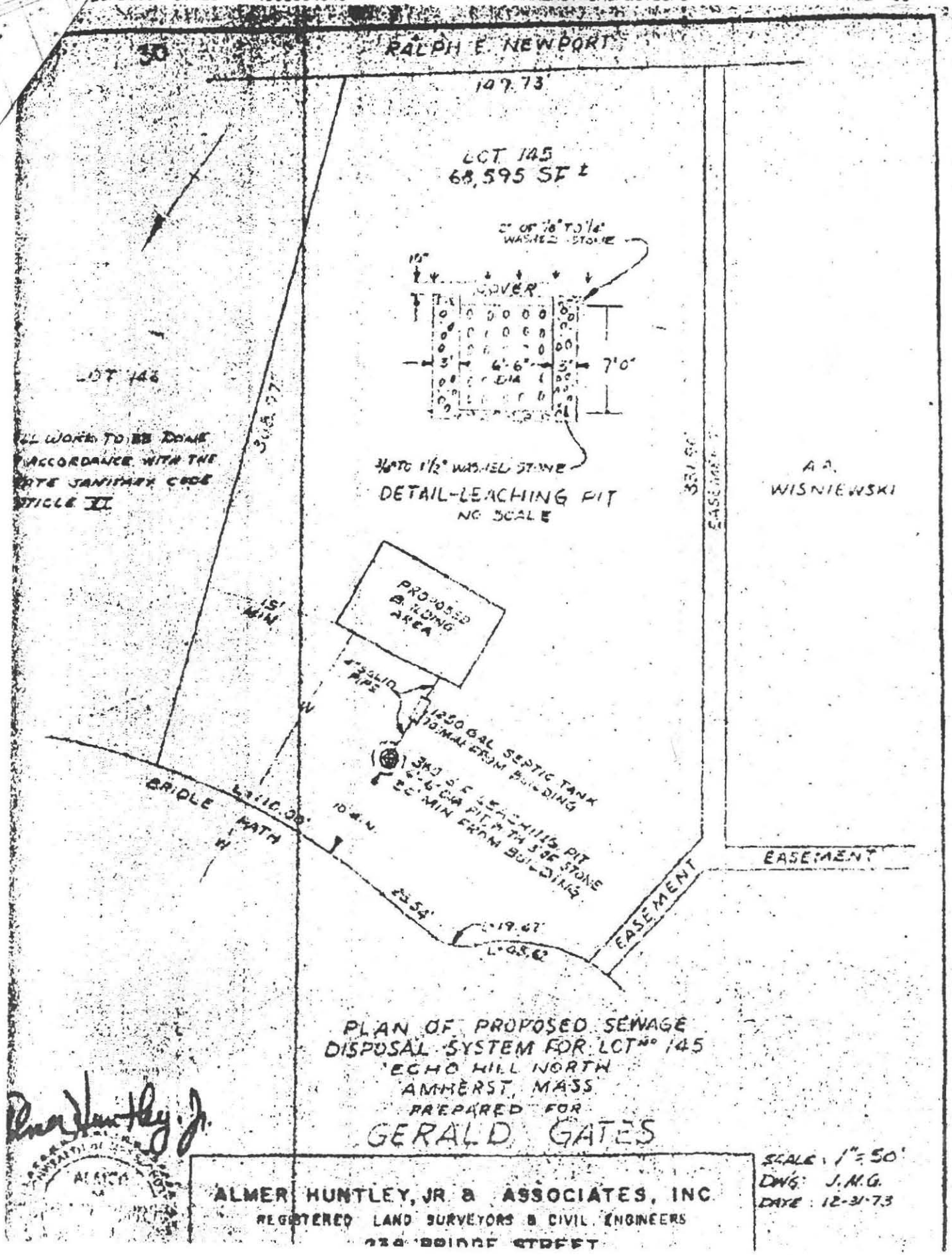

PLAN OF PROPOSED SEWAGE DISPOSAL SYSTEM FOR LOT No 145
ECHO HILL NORTH
AMHERST, MASS
PREPARED FOR
GERALD GATES

ALMER HUNTLEY, JR & ASSOCIATES, INC
REGISTERED LAND SURVEYORS & CIVIL ENGINEERS
239 BOIDDE STREET

SCALE: 1" = 50'
DWG: J.M.G.
DATE: 12-31-73

COMMONWEALTH OF MASSACHUSETTS
EXECUTIVE OFFICE OF ENVIRONMENTAL AFFAIRS
DEPARTMENT OF ENVIRONMENTAL PROTECTION

TITLE 5
OFFICIAL INSPECTION FORM – NOT FOR VOLUNTARY ASSESSMENTS
SUBSURFACE SEWAGE DISPOSAL SYSTEM FORM
PART A
CERTIFICATION

Property Address: 30 BRIDLE PATH
AMHERST, MA
Owner's Name: PAUL COHEN, CAROLE BEAL
Owner's Address: SAME

Date of Inspection: 7/3//03

Name of Inspector: (please print) NATHAN TORRETTI
Company Name: CLEAN SEPTICS
Mailing Address: P.O. BOX 394
LUDLOW, MA
Telephone Number: 583-2138

CERTIFICATION STATEMENT

I certify that I have personally inspected the sewage disposal system at this address and that the information reported below is true, accurate and complete as of the time of the inspection. The inspection was performed based on my training and experience in the proper function and maintenance of on site sewage disposal systems. **I am a DEP approved system inspector pursuant to Section 15.340 of Title 5 (310 CMR 15.000).** The system:

✓ Passes
___ Conditionally Passes
___ Needs Further Evaluation by the Local Approving Authority
___ Fails

Inspector's Signature: Nathan Torretti **Date:** 7/3/2003

The system inspector shall submit a copy of this inspection report to the Approving Authority (Board of Health or DEP) within 30 days of completing this inspection. If the system is a shared system or has a design flow of 10,000 gpd or greater, the inspector and the system owner shall submit the report to the appropriate regional office of the DEP. The original should be sent to the system owner and copies sent to the buyer, if applicable, and the approving authority.

Notes and Comments

This report only describes conditions at the time of inspection and under the conditions of use at that time. This inspection does not address how the system will perform in the future under the same or different conditions of use.

OFFICAL INSPECTION FORM-NOT FOR VOLUNTARY ASSESSEMENTS

SUBSURFACE SEWAGE DISPOSAL SYSTEM INSPECTION FORM

PART A

CERTIFICATION (continued)

Property Address: 30 BRIDLE PATH
AMHERST , MA

Owner: COHEN, BEAL
Date of Inspection: 7/3/03

Inspection Summary: Check A,B,C,D or E / ALWAYS complete all of Section D

A. System Passes:

✓ I have not found any information which indicates that any of the failure criteria described in 310 CMR 15.303 or in 310 CMR 15.304 exist. Any failure criteria not evaluated are indicated below.

Comments:
PUMP SEPTIC TANK EVERY YEAR

B. System Conditionally Passes:

_____ One or more system components as described in the "Conditional Pass" section need to be replaced or repaired. The system, upon completion of the replacement or repair, as approved by the Board of Health, will pass.

Answer yes, no or not determined (Y,N,ND) in the ____ for the following statements. If "not determined" please explain.

_____ The septic tank is metal and over 20 years old* **or** the septic tank (whether metal or not) is structurally unsound, exhibits substantial infiltration or exfiltration or tank failure is imminent. System will pass inspection if the existing tank is replaced with a complying septic tank as approved by the Board of Health.
*A metal septic tank will pass inspection if it is structurally sound, not leaking and if a Certificate of Compliance indicating that the tank is less than 20 years old is available.

ND explain:

_____ Observation of sewage backup or break out or high static water level in the distribution box due to broken or obstructed pipe(s) or due to a broken, settled or uneven distribution box. System will pass inspection if (with approval of Board of Health):

____ broken pipe(s) are replaced
____ obstruction is removed
____ distribution box is leveled or replaced

ND explain:

_____ The system required pumping more than 4 times a year due to broken or obstructed pipe(s). The system will pass inspection if (with approval of the Board of Health):

____ broken pipe(s) are replaced
____ obstruction is removed

ND explain:

OFFICIAL INSPECTION FORM - NOT FOR VOLUNTARY ASSESSMENTS
SUBSURFACE SEWAGE DISPOSAL SYSTEM INSPECTION FORM
PART A
CERTIFICATION (continued)

Property Address: __30 BRIDLE PATH_____
_ AMHERST, MA_____
Owner: ____COHEN, BEAL_
Date of Inspection: ____7/3/03_____

C. Further Evaluation is Required by the Board of Health:

_____ Conditions exist which require further evaluation by the Board of Health in order to determine if the system is failing to protect public health, safety or the environment.

1. **System will pass unless Board of Health determines in accordance with 310 CMR 15.303(1)(b) that the system is not functioning in a manner which will protect public health, safety and the environment:**

   ___ Cesspool or privy is within 50 feet of a surface water
   ___ Cesspool or privy is within 50 feet of a bordering vegetated wetland or a salt marsh

2. **System will fail unless the Board of Health (and Public Water Supplier, if any) determines that the system is functioning in a manner that protects the public health, safety and environment:**

   ___ The system has a septic tank and soil absorption system (SAS) and the SAS is within 100 feet of a surface water supply or tributary to a surface water supply.

   ___ The system has a septic tank and SAS and the SAS is within a Zone 1 of a public water supply.

   ___ The system has a septic tank and SAS and the SAS is within 50 feet of a private water supply well.

   ___ The system has a septic tank and SAS and the SAS is less than 100 feet but 50 feet or more from a private water supply well**. Method used to determine distance _____

   **This system passes if the well water analysis, performed at a DEP certified laboratory, for coliform bacteria and volatile organic compounds indicates that the well is free from pollution from that facility and the presence of ammonia nitrogen and nitrate nitrogen is equal to or less than 5 ppm, provided that no other failure criteria are triggered. A copy of the analysis must be attached to this form.

3. **Other:**

   _____
   _____
   _____

OFFICIAL INSPECTION FORM – NOT FOR VOLUNTARY ASSESSMENTS
SUBSURFACE SEWAGE DISPOSAL SYSTEM INSPECTION FORM
PART A
CERTIFICATION (continued)

Property Address: **30 BRIDLE PATH**
AMHERST, MA
Owner: **COHEN, BEAL**
Date of Inspection: **7/3/03**

D. System Failure Criteria applicable to all systems:
You **must** indicate "yes" or "no" to each of the following for **all** inspections:

Yes No
___ ✓ Backup of sewage into facility or system component due to overloaded or clogged SAS or cesspool
___ ✓ Discharge or ponding of effluent to the surface of the ground or surface waters due to an overloaded or clogged SAS or cesspool
___ ✓ Static liquid level in the distribution box above outlet invert due to an overloaded or clogged SAS or cesspool
___ ✓ Liquid depth in cesspool is less than 6" below invert or available volume is less than ½ day flow
___ ✓ Required pumping more than 4 times in the last year **NOT** due to clogged or obstructed pipe(s). Number of times pumped ____.
___ ✓ Any portion of the SAS, cesspool or privy is below high ground water elevation.
___ ✓ Any portion of cesspool or privy is within 100 feet of a surface water supply or tributary to a surface water supply.
___ ✓ Any portion of a cesspool or privy is within a Zone 1 of a public well.
___ ✓ Any portion of a cesspool or privy is within 50 feet of a private water supply well.
___ ✓ Any portion of a cesspool or privy is less than 100 feet but greater than 50 feet from a private water supply well with no acceptable water quality analysis. **[This system passes if the well water analysis, performed at a DEP certified laboratory, for coliform bacteria and volatile organic compounds indicates that the well is free from pollution from that facility and the presence of ammonia nitrogen and nitrate nitrogen is equal to or less than 5 ppm, provided that no other failure criteria are triggered. A copy of the analysis must be attached to this form.]**

NO (Yes/No) **The system fails.** I have determined that one or more of the above failure criteria exist as described in 310 CMR 15.303, therefore the system fails. The system owner should contact the Board of Health to determine what will be necessary to correct the failure.

E. Large Systems:
To be considered a large system the system must serve a facility with a design flow of 10,000 gpd to 15,000 gpd.
You must indicate either "yes" or "no" to each of the following:
(The following criteria apply to large systems in addition to the criteria above)

yes no
___ ___ the system is within 400 feet of a surface drinking water supply

___ ___ the system is within 200 feet of a tributary to a surface drinking water supply

___ ___ the system is located in a nitrogen sensitive area (Interim Wellhead Protection Area – IWPA) or a mapped Zone II of a public water supply well

If you have answered "yes" to any question in Section E the system is considered a significant threat, or answered "yes" in Section D above the large system has failed. The owner or operator of any large system considered a significant threat under Section E or failed under Section D shall upgrade the system in accordance with 310 CMR 15.304. The system owner should contact the appropriate regional office of the Department.

OFFICIAL INSPECTION FORM – NOT FOR VOLUNTARY ASSESSMENTS
SUBSURFACE SEWAGE DISPOSAL SYSTEM INSPECTION FORM
PART B
CHECKLIST

Property Address: _ 30 BRIDLE PATH__
_ AMHERST, MA_____
Owner: ___COHEN, BEAL_
Date of Inspection: ____7/3/03_____

Check if the following have been done. You **must** indicate "yes" or "no" as to each of the following:

Yes No
✓ ___ Pumping information was provided by the owner, occupant, or Board of Health

___ ✓ Were any of the system components pumped out in the previous two weeks ?

✓ ___ Has the system received normal flows in the previous two week period ?

___ ✓ Have large volumes of water been introduced to the system recently or as part of this inspection ?

___ ✓ Were as built plans of the system obtained and examined? (If they were not available note as N/A)

✓ ___ Was the facility or dwelling inspected for signs of sewage back up ?

✓ ___ Was the site inspected for signs of break out ?

✓ ___ Were all system components, excluding the SAS, located on site ?

✓ ___ Were the septic tank manholes uncovered, opened, and the interior of the tank inspected for the condition of the baffles or tees, material of construction, dimensions, depth of liquid, depth of sludge and depth of scum ?

✓ ___ Was the facility owner (and occupants if different from owner) provided with information on the proper maintenance of subsurface sewage disposal systems ?

The **size and location of the Soil Absorption System (SAS)** on the site has been determined based on:

Yes no
___ ✓ Existing information. For example, a plan at the Board of Health.

✓ ___ Determined in the field (if any of the failure criteria related to Part C is at issue approximation of distance is unacceptable) [310 CMR 15.302(3)(b)]

OFFICIAL INSPECTION FORM – NOT FOR VOLUNTARY ASSESSMENTS
SUBSURFACE SEWAGE DISPOSAL SYSTEM INSPECTION FORM
PART C
SYSTEM INFORMATION

Property Address: ___30 BRIDLE PATH
_ AMHERST, MA_____
Owner: _____CHOEN, BEAL
Date of Inspection: _____7/3/03_____

FLOW CONDITIONS

RESIDENTIAL
Number of bedrooms (design): **_3__** Number of bedrooms (actual): **__3___**
DESIGN flow based on 310 CMR 15.203 (for example: 110 gpd x # of bedrooms): _330_
Number of current residents: **_3_**
Does residence have a garbage grinder (yes or no): _NO
Is laundry on a separate sewage system (yes or no): **_NO_** [if yes separate inspection required]
Laundry system inspected (yes or no): ___
Seasonal use: (yes or no): __NO_
Water meter readings, if available (last 2 years usage (gpd)): **_TOWN WATER**
Sump pump (yes or no): _NO_
Last date of occupancy: **_PRESENT_**

COMMERCIAL/INDUSTRIAL
Type of establishment: _____
Design flow (based on 310 CMR 15.203): _____gpd
Basis of design flow (seats/persons/sqft,etc.): __
Grease trap present (yes or no): ___
Industrial waste holding tank present (yes or no): ___
Non-sanitary waste discharged to the Title 5 system (yes or no): __
Water meter readings, if available: _____
Last date of occupancy/use: _____

OTHER (describe): _____

GENERAL INFORMATION

Pumping Records
Source of information: **N/A**
Was system pumped as part of the inspection (yes or no): _YES__
If yes, volume pumped: **1500** gallons -- How was quantity pumped determined? __
Reason for pumping: ___

TYPE OF SYSTEM
✓ Septic tank, ~~distribution box~~, soil absorption system
___ Single cesspool
___ Overflow cesspool
___ Privy
___ Shared system (yes or no) (if yes, attach previous inspection records, if any)
___ Innovative/Alternative technology. Attach a copy of the current operation and maintenance contract (to be obtained from system owner)
___ Tight tank ___ Attach a copy of the DEP approval

✓ Other (describe): **LEACH PIT**

Approximate age of all components, date installed (if known) and source of information:
1972 HOME OWNER

Were sewage odors detected when arriving at the site (yes or no): **NO**

OFFICIAL INSPECTION FORM – NOT FOR VOLUNTARY ASSESSMENTS
SUBSURFACE SEWAGE DISPOSAL SYSTEM INSPECTION FORM
PART C
SYSTEM INFORMATION (continued)

Property Address: __30 BRIDLE PATH_
_ AMHERST , MA_____
Owner: _ CHOEN, BEAL__
Date of Inspection: __7/3/03_____

BUILDING SEWER (locate on site plan)

Depth below grade: **_2'4"**
Materials of construction: ___ cast iron _XX_40 PVC ___other (explain): __
Distance from private water supply well or suction line: **__N/A_**
Comments (on condition of joints, venting, evidence of leakage, etc.):
_____JOINTS, VENT OK, NO EVIDENCE OF LEAKAGE_____

SEPTC TANK: ___ (locate on site plan)

Depth below grade: **_2'**
Material of construction: _XX_concrete ___metal ___fiberglass ___polyethylene
_other(explain)_____
If tank is metal list age: __ Is age confirmed by a Certificate of Compliance (yes or no): ___ (attach a copy of certificate)
Dimensions: **_10'5 L, 5' W, 5' D**
Sludge depth: **_6"**
Distance from top of sludge to bottom of outlet tee or baffle: **_24"**
Scum thickness: **_4"**
Distance from top of scum to top of outlet tee or baffle: **_6"**
Distance from bottom of scum to bottom of outlet tee or baffle: **_20"**
How were dimensions determined: **__MEASURED___**
Comments (on pumping recommendations, inlet and outlet tee or baffle condition, structural integrity, liquid levels as related to outlet invert, evidence of leakage, Etc.):
__PUMP SEPTIC TANK EVERY YEAR , BAFFLES OK, STRUCTURAL INTEGRITY OK, LIQUID LEVELS OK, NO LEAKS_____
_____

GREASE TRAP: ___(locate on site plan)

Depth below grade: ___
Material of construction: ___concrete ___metal ___fiberglass ___polyethylene ___other
(explain):_____
Dimensions: _____
Scum thickness: _____
Distance from top of scum to top of outlet tee or baffle: _____
Distance from bottom of scum to bottom of outlet tee or baffle: _____
Date of last pumping: _____
Comments (on pumping recommendations, inlet and outlet tee or baffle condition, structural integrity, liquid levels as related to outlet invert, evidence of leakage, etc.):
_____
_____

OFFICIAL INSPECTION FORM – NOT FOR VOLUNTARY ASSESSMENTS
SUBSURFACE SEWAGE DISPOSAL SYSTEM INSPECTION FORM
PART C
SYSTEM INFORMATION (continued)

Property Address: __30 BRIDLE PATH__
_ AMHERST , MA
Owner: ____COHEN, BEAL _
Date of Inspection: ____7/3/03_____

TIGHT or HOLDING TANK: ___ (tank must be pumped at time of inspection)(locate on site plan)

Depth below grade: _____
Material of construction: ____concrete ____metal ____fiberglass ____polyethylene ____other(explain):
_____
Dimensions: _____
Capacity: _____gallons
Design Flow: _____gallons/day
Alarm present (yes or no): _____
Alarm level: _____ Alarm in working order (yes or no): ____
Date of last pumping: _____
Comments (condition of alarm and float switches, etc.):
_____
_____

DISTRIBUTION BOX: NONE (if present must be opened)(locate on site plan)

Depth of liquid level above outlet invert: _____
Comments (note if box is level and distribution to outlets equal, any evidence of solids carryover, any evidence of leakage into or out of box,
_____
_____

PUMP CHAMBER: ___ (locate on site plan)

Pumps in working order (yes or no): _
Alarms in working order (yes or no): ___
Comments (note condition of pump chamber, condition of pumps and appurtenances, etc.): _____
_____
_____
_

OFFICIAL INSPECTION FORM – NOT FOR VOLUNTARY ASSESSMENTS
SUBSURFACE SEWAGE DISPOSAL SYSTEM INSPECTION FORM
PART C
SYSTEM INFORMATION (continued)

Property Address: __30 BRIDLE PATH_
__ AMHERST, MA_____
Owner: COHEN, BEAL_____
Date of Inspection: _____7/3/03_____

SOIL ABSORPTION SYSTEM (SAS): ____ (locate on site plan, excavation not required)

If SAS not located explain why:

_____

Type
✓ leaching pits, number: _1_
____ leaching chambers, number: ____
____ leaching galleries, number: _____
____ leaching trenches, number, length__
___ leaching fields, number, dimensions: __
____ overflow cesspool, number: ____
____ innovative/alternative system Type/name of technology: _____
Comments (note condition of soil, signs of hydraulic failure, level of ponding, damp soil, condition of vegetation, etc.):
__NO SIGNS OF HYDRAULIC FAILURE, FROM LEACH PIT INVERT TO EFFLUENT LEVEL IN PIT THERE IS 2'2" OF SPACE, SOIL AND VEGETATION OK__

CESSPOOLS: ____ (cesspool must be pumped as part of inspection)(locate on site plan)

Number and configuration: ___
Depth – top of liquid to inlet invert: __
Depth of solids layer: _____
Depth of scum layer: _____
Dimensions of cesspool: _____
Materials of construction: _____
Indication of groundwater inflow (yes or no): __
Comments (note condition of soil, signs of hydraulic failure, level of ponding, condition of vegetation, etc.):
_____
_____

PRIVY: ____ (locate on site plan)

Materials of construction: _____
Dimensions: _____
Depth of solids: _____
Comments (note condition of soil, signs of hydraulic failure, level of ponding, condition of vegetation, etc.):
_____
_____

OFFICIAL INSPECTION FORM – NOT FOR VOLUNTARY ASSESSMENTS
SUBSURFACE SEWAGE DISPOSAL SYSTEM INSPECTION FORM
PART C
SYSTEM INFORMATION (continued)

Property Address: _____

_____

Owner: _____
Date of Inspection: _____

SKETCH OF SEWAGE DISPOSAL SYSTEM
Provide a sketch of the sewage disposal system including ties to at least two permanent reference landmarks or benchmarks. Locate all wells within 100 feet. Locate where public water supply enters the building.

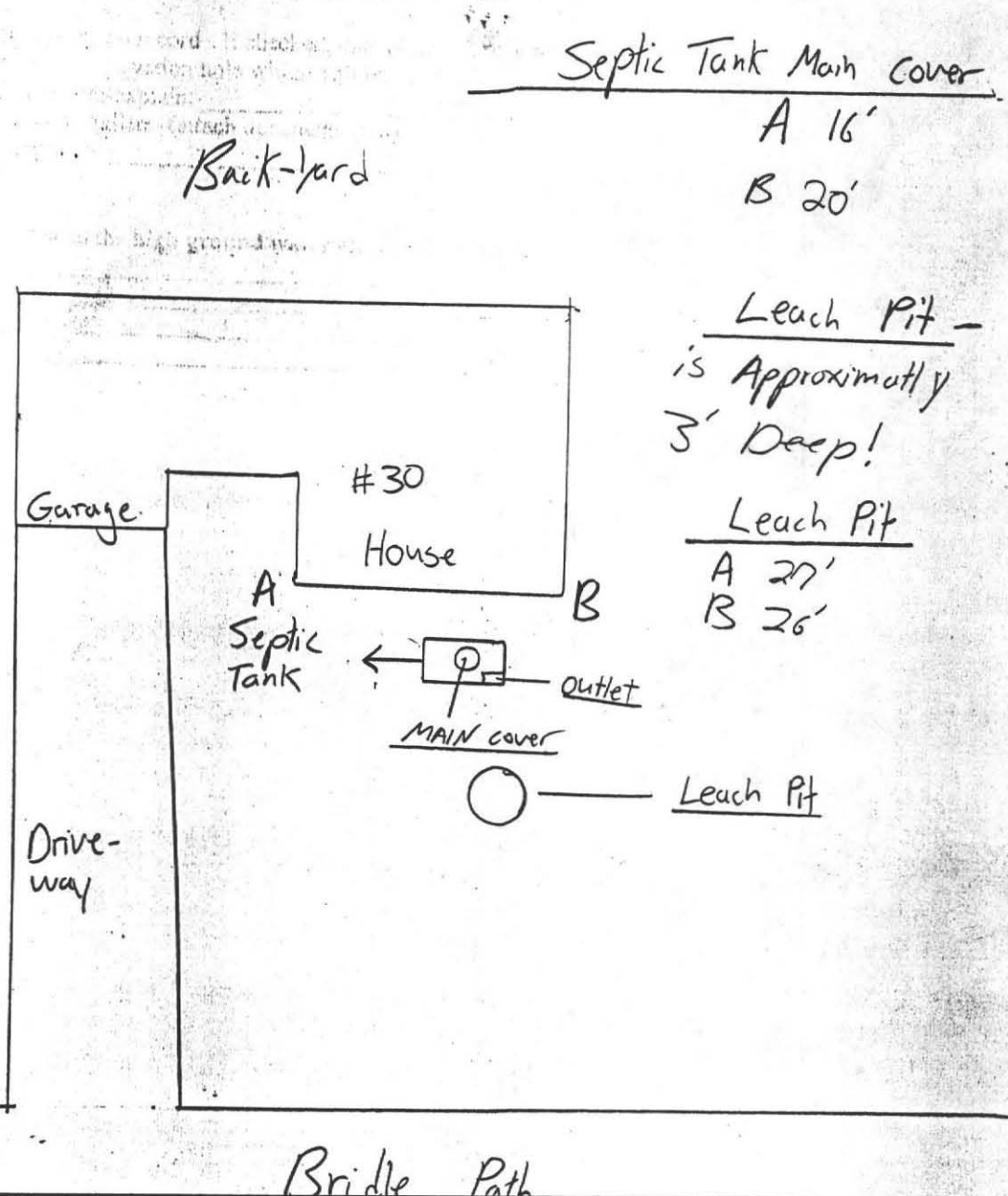

OFFICIAL INSPECTION FORM – NOT FOR VOLUNTARY ASSESSMENTS
SUBSURFACE SEWAGE DISPOSAL SYSTEM INSPECTION FORM
PART C
SYSTEM INFORMATION (continued)

Propertoy Address: _30 BRIDLE PATH ___
_ AMHERST, MA_____
Owner: __COHEN, BEAL__
Date of Inspection: _____7/3/03_____

SITE EXAM
Slope
Surface water
Check cellar
Shallow wells

Estimated depth to ground water __NONE @ 6'__ feet

Please indicate (check) all methods used to determine the high ground water elevation:

___ Obtained from system design plans on record - If checked, date of design plan reviewed: _
____ Observed site (abutting property/observation hole within 150 feet of SAS)
____ Checked with local Board of Health-explain: ____
____ Checked with local excavators, installers- (attach documentation)
____ Accessed USGS database-explain: _____

You **must** describe how you established the **high ground water elevation:**
_____CHECKED CELLAR_____
_____