746 Bay Rd

received 8-29-07

Commonwealth of Massachusetts

Title 5 Official Inspection Form

Subsurface Sewage Disposal System Form - Not for Voluntary Assessments

Property Address: 746 BAY RD

Owner's Name: WELD

Owner information is required for every page.

City/Town: AMHERST | State: MASS | Zip Code: 01002 | Date of Inspection: 8/2/07

Inspection results must be submitted on this form. Inspection forms may not be altered in any way.

Important: When filling out forms on the computer, use only the tab key to move your cursor - do not use the return key.

A. General Information

1. Inspector:

Name of Inspector: JOHN ALVES

Company Name: Alves Inspection

Company Address: 10 Brimfield St.

City/Town: Ludlow, MA 01056 | State | Zip Code

Telephone Number: 589-0831 | License Number: 512

B. Certification

I certify that I have personally inspected the sewage disposal system at this address and that the information reported below is true, accurate and complete as of the time of the inspection. The inspection was performed based on my training and experience in the proper function and maintenance of on site sewage disposal systems. **I am a DEP approved system inspector pursuant to Section 15.340 of Title 5 (310 CMR 15.000).** The system:

- [x] Passes
- [ ] Conditionally Passes
- [ ] Fails
- [ ] Needs Further Evaluation by the Local Approving Authority

Inspector's Signature: John Alves | Date: 8/2/07

The system inspector shall submit a copy of this inspection report to the Approving Authority (Board of Health or DEP) within 30 days of completing this inspection. If the system is a shared system or has a design flow of 10,000 gpd or greater, the inspector and the system owner shall submit the report to the appropriate regional office of the DEP. The original should be sent to the system owner and copies sent to the buyer, if applicable, and the approving authority.

******This report only describes conditions at the time of inspection and under the conditions of use at that time. This inspection does not address how the system will perform in the future under the same or different conditions of use.**

Commonwealth of Massachusetts

Title 5 Official Inspection Form

Subsurface Sewage Disposal System Form - Not for Voluntary Assessments

Property Address: 746 BAY RD

Owner's Name: WELD

Owner information is required for every page.

City/Town: AMHERST State: MASS Zip Code: 01002 Date of Inspection: 8/2/07

Inspection Summary: Check A,B,C,D or E / ***always*** complete all of Section D

B. Certification (cont.)

A) System Passes:

☑ I have not found any information which indicates that any of the failure criteria described in 310 CMR 15.303 or in 310 CMR 15.304 exist. Any failure criteria not evaluated are indicated below.

Comments:

REPLACE D-BOX COVER
REMOVE DISPOSAL

B) System Conditionally Passes:

☐ One or more system components as described in the "Conditional Pass" section need to be replaced or repaired. The system, upon completion of the replacement or repair, as approved by the Board of Health, will pass.

Answer yes, no or not determined (Y, N, ND) in the ☐ for the following statements. If "not determined," please explain.

☐ The septic tank is metal and over 20 years old* **or** the septic tank (whether metal or not) is structurally unsound, exhibits substantial infiltration or exfiltration or tank failure is imminent. System will pass inspection if the existing tank is replaced with a complying septic tank as approved by the Board of Health.

* A metal septic tank will pass inspection if it is structurally sound, not leaking and if a Certificate of Compliance indicating that the tank is less than 20 years old is available.

ND Explain:

☐ Observation of sewage backup or break out or high static water level in the distribution box due to broken or obstructed pipe(s) or due to a broken, settled or uneven distribution box. System will pass inspection if (with approval of Board of Health):

☐ broken pipe(s) are replaced

☐ obstruction is removed

Commonwealth of Massachusetts

Title 5 Official Inspection Form

Subsurface Sewage Disposal System Form - Not for Voluntary Assessments

Property Address: 746 BAY RD

Owner's Name: WELD

City/Town: AMHERST State: MASS Zip Code: 01002 Date of Inspection: 8/2/07

Owner information is required for every page.

B. Certification (cont.)

B) System Conditionally Passes (cont.):

☐ distribution box is leveled or replaced

ND Explain:

☐ The system required pumping more than 4 times a year due to broken or obstructed pipe(s). The system will pass inspection if (with approval of the Board of Health):

☐ broken pipe(s) are replaced

☐ obstruction is removed

ND Explain:

C) Further Evaluation is Required by the Board of Health:

☐ Conditions exist which require further evaluation by the Board of Health in order to determine if the system is failing to protect public health, safety or the environment.

1. System will pass unless Board of Health determines in accordance with 310 CMR 15.303(1)(b) that the system is not functioning in a manner which will protect public health, safety and the environment:

☐ Cesspool or privy is within 50 feet of a surface water

☐ Cesspool or privy is within 50 feet of a bordering vegetated wetland or a salt marsh

2. System will fail unless the Board of Health (and Public Water Supplier, if any) determines that the system is functioning in a manner that protects the public health, safety and environment:

☐ The system has a septic tank and soil absorption system (SAS) and the SAS is within 100 feet of a surface water supply or tributary to a surface water supply.

☐ The system has a septic tank and SAS and the SAS is within a Zone 1 of a public water supply.

☐ The system has a septic tank and SAS and the SAS is within 50 feet of a private water supply well.

Commonwealth of Massachusetts

Title 5 Official Inspection Form

Subsurface Sewage Disposal System Form - Not for Voluntary Assessments

Property Address: 746 BAY RD.

Owner's Name: WELD

City/Town: AMHERST State: MASS Zip Code: 01002 Date of Inspection: 8/2/07

Owner information is required for every page.

B. Certification (cont.)

C) Further Evaluation is Required by the Board of Health (cont.):

☐ The system has a septic tank and SAS and the SAS is less than 100 feet but 50 feet or more from a private water supply well**.

Method used to determine distance: _____

** This system passes if the well water analysis, performed at a DEP certified laboratory, for coliform bacteria indicates absent and the presence of ammonia nitrogen and nitrate nitrogen is equal to or less than 5 ppm, provided that no other failure criteria are triggered. A copy of the analysis must be attached to this form.

3. Other:

_____

_____

_____

D) System Failure Criteria Applicable to All Systems:

You <u>must</u> indicate "Yes" or "No" to each of the following for <u>all</u> inspections:

Yes	No	
☐	☑	Backup of sewage into facility or system component due to overloaded or clogged SAS or cesspool
☐	☑	Discharge or ponding of effluent to the surface of the ground or surface waters due to an overloaded or clogged SAS or cesspool
☐	☑	Static liquid level in the distribution box above outlet invert due to an overloaded or clogged SAS or cesspool
☐	☐	Liquid depth in cesspool is less than 6" below invert or available volume is less than _ day flow
☐	☑	Required pumping more than 4 times in the last year ***NOT*** due to clogged or obstructed pipe(s). Number of times pumped: _____.
☐	☑	Any portion of the SAS, cesspool or privy is below high ground water elevation.
☐	☐	Any portion of cesspool or privy is within 100 feet of a surface water supply or tributary to a surface water supply.

Commonwealth of Massachusetts

Title 5 Official Inspection Form

Subsurface Sewage Disposal System Form - Not for Voluntary Assessments

Property Address: 746 BAY RD.

Owner's Name: WELD

City/Town: AMHERST State: MASS Zip Code: 01002 Date of Inspection: 8/2/07

Owner information is required for every page.

B. Certification (cont.)

D) System Failure Criteria Applicable to All Systems (cont.):

Yes	No	
☐	☑	Any portion of a cesspool or privy is within a Zone 1 of a public well.
☐	☑	Any portion of a cesspool or privy is within 50 feet of a private water supply well.
☐	☑	Any portion of a cesspool or privy is less than 100 feet but greater than 50 feet from a private water supply well with no acceptable water quality analysis. **[This system passes if the well water analysis, performed at a DEP certified laboratory, for fecal coliform bacteria indicates absent and the presence of ammonia nitrogen and nitrate nitrogen is equal to or less than 5 ppm, provided that no other failure criteria are triggered. A copy of the analysis and chain of custody must be attached to this form.]**
☐	☑	The system is a cesspool serving a facility with a design flow of 2000gpd-10,000gpd.
☐	☑	**The system <u>fails</u>.** I have determined that one or more of the above failure criteria exist as described in 310 CMR 15.303, therefore the system fails. The system owner should contact the Board of Health to determine what will be necessary to correct the failure.

E) Large Systems: To be considered a large system the system must serve a facility with a design flow of 10,000 gpd to 15,000 gpd.

For large systems, you must indicate either "yes" or "no" to each of the following, in addition to the questions in Section D.

Yes	No	
☐	☐	the system is within 400 feet of a surface drinking water supply
☐	☐	the system is within 200 feet of a tributary to a surface drinking water supply
☐	☐	the system is located in a nitrogen sensitive area (Interim Wellhead Protection Area – IWPA) or a mapped Zone II of a public water supply well

If you have answered "yes" to any question in Section E the system is considered a significant threat, or answered "yes" in Section D above the large system has failed. The owner or operator of any large system considered a significant threat under Section E or failed under Section D shall upgrade the system in accordance with 310 CMR 15.304. The system owner should contact the appropriate regional office of the Department.

Commonwealth of Massachusetts

Title 5 Official Inspection Form

Subsurface Sewage Disposal System Form - Not for Voluntary Assessments

Property Address: 746 BAIRD RD

Owner's Name: WELD

City/Town: AMHERST State: MASS Zip Code: 01002 Date of Inspection: 8/2/07

Owner information is required for every page.

D. System Information

Residential Flow Conditions:

Number of bedrooms (design): 3 Number of bedrooms (actual): 3 or 4

DESIGN flow based on 310 CMR 15.203 (for example: 110 gpd x # of bedrooms): 330

Number of current residents: 4

Does residence have a garbage grinder? ☑ Yes ☐ No

Is laundry on a separate sewage system? [if **yes** separate inspection required] ☐ Yes ☑ No

Laundry system inspected? ☐ Yes ☐ No

Seasonal use? ☐ Yes ☑ No

Water meter readings, if available (last 2 years usage (gpd)): N/A

Sump pump? ☐ Yes ☑ No

Last date of occupancy: PRESENT (Date)

Commercial/Industrial Flow Conditions:

Type of Establishment:

Design flow (based on 310 CMR 15.203): Gallons per day (gpd)

Basis of design flow (seats/persons/sq.ft., etc.):

N/A

Grease trap present? ☐ Yes ☐ No

Industrial waste holding tank present? ☐ Yes ☐ No

Non-sanitary waste discharged to the Title 5 system? ☐ Yes ☐ No

Water meter readings, if available:

Last date of occupancy/use: Date

Other (describe):

Commonwealth of Massachusetts

Title 5 Official Inspection Form

Subsurface Sewage Disposal System Form - Not for Voluntary Assessments

Property Address: 746 BAY RD.

Owner's Name: WRLD

Owner information is required for every page.

City/Town: AMHERST State: MASS Zip Code: 07002 Date of Inspection: 8/2/07

D. System Information (cont.)

General Information

Pumping Records:

Source of information: 2006 — OWNER

Was system pumped as part of the inspection? ☐ Yes ☑ No

If yes, volume pumped: _____ gallons

How was quantity pumped determined? _____

Reason for pumping: _____

Type of System:

- ☑ Septic tank, distribution box, soil absorption system
- ☐ Single cesspool
- ☐ Overflow cesspool
- ☐ Privy
- ☐ Shared system (yes or no) (if yes, attach previous inspection records, if any)
- ☐ Innovative/Alternative technology. Attach a copy of the current operation and maintenance contract (to be obtained from system owner)
- ☐ Tight tank. Attach a copy of the DEP approval.
- ☐ Other (describe): _____

Approximate age of all components, date installed (if known) and source of information:

1983 — OWNER

Were sewage odors detected when arriving at the site? ☐ Yes ☑ No

Commonwealth of Massachusetts

Title 5 Official Inspection Form

Subsurface Sewage Disposal System Form - Not for Voluntary Assessments

Property Address: 746 BAY RD

Owner's Name: WRLD

Owner information is required for every page.

City/Town: AMHERST | State: MASS | Zip Code: 01002 | Date of Inspection: 8/2/07

D. System Information (cont.)

Building Sewer (locate on site plan):

Depth below grade: 22" feet

Material of construction:

☐ cast iron ☑ 40 PVC ☐ other (explain):

Distance from private water supply well or suction line: 10+' feet

Comments (on condition of joints, venting, evidence of leakage, etc.):

JOINTS OK, VENTOK, NO LEAKS

Septic Tank (locate on site plan):

Depth below grade: 17" feet

Material of construction:

☑ concrete ☐ metal ☐ fiberglass ☐ polyethylene ☐ other (explain)

If tank is metal, list age: years

Is age confirmed by a Certificate of Compliance? (attach a copy of certificate) ☐ Yes ☐ No

Dimensions: 10'L 5'W 5'D

Sludge depth: 2"

Distance from top of sludge to bottom of outlet tee or baffle: 43"

Scum thickness: ½"

Distance from top of scum to top of outlet tee or baffle: 8"

Distance from bottom of scum to bottom of outlet tee or baffle: 12"

How were dimensions determined? PROBED UP

Commonwealth of Massachusetts

Title 5 Official Inspection Form

Subsurface Sewage Disposal System Form - Not for Voluntary Assessments

Property Address: 746 BAY RD.

Owner's Name: WELD

City/Town: AMHERST State: MASS Zip Code: 01002 Date of Inspection: 8/2/07

Owner information is required for every page.

D. System Information (cont.)

Comments (on pumping recommendations, inlet and outlet tee or baffle condition, structural integrity, liquid levels as related to outlet invert, evidence of leakage, etc.):

NO PUMP, BAFFLES OK, LEVEL OK
NO LEAK.

Grease Trap (locate on site plan):

Depth below grade: _____ feet

Material of construction:

☐ concrete ☐ metal ☐ fiberglass ☐ polyethylene ☐ other (explain):

N/A

Dimensions:

Scum thickness

Distance from top of scum to top of outlet tee or baffle

Distance from bottom of scum to bottom of outlet tee or baffle

Date of last pumping: _____ Date

Comments (on pumping recommendations, inlet and outlet tee or baffle condition, structural integrity, liquid levels as related to outlet invert, evidence of leakage, etc.):

Tight or Holding Tank (tank must be pumped at time of inspection) (locate on site plan):

N/A

Depth below grade:

Material of construction:

☐ concrete ☐ metal ☐ fiberglass ☐ polyethylene ☐ other (explain):

Commonwealth of Massachusetts

Title 5 Official Inspection Form

Subsurface Sewage Disposal System Form - Not for Voluntary Assessments

Property Address: 746 BAY RD.

Owner's Name: WELD

Owner information is required for every page.

City/Town: AMHERST State: MASS Zip Code: 01002 Date of Inspection: 8/2/07

D. System Information (cont.)

Tight or Holding Tank (cont.)

Dimensions: _____

Capacity: _____ gallons

N/A

Design Flow: _____ gallons per day

Alarm present: ☐ Yes ☐ No

Alarm level: _____ Alarm in working order: ☐ Yes ☐ No

Date of last pumping: _____ Date

Comments (condition of alarm and float switches, etc.):

* Attach copy of current pumping contract (required). Is copy attached? ☐ Yes ☐ No

Distribution Box (if present must be opened) (locate on site plan): 28" DEEP

Depth of liquid level above outlet invert _____

Comments (note if box is level and distribution to outlets equal, any evidence of solids carryover, any evidence of leakage into or out of box, etc.):

LEVEL, DISTRIBUTION EQUAL
NO CARRYOVER, NO LEAK

Pump Chamber (locate on site plan):

N/A

Pumps in working order: ☐ Yes ☐ No

Alarms in working order: ☐ Yes ☐ No

Commonwealth of Massachusetts

Title 5 Official Inspection Form

Subsurface Sewage Disposal System Form - Not for Voluntary Assessments

Property Address: 746 BAY RD.

Owner's Name: WELD

Owner information is required for every page.

City/Town: AMHERST State: MASS Zip Code: 01002 Date of Inspection: 8/2/07

D. System Information (cont.)

Comments (note condition of pump chamber, condition of pumps and appurtenances, etc.):

Soil Absorption System (SAS) (locate on site plan, excavation not required):

If SAS not located, explain why:

Type:

☑	leaching pits	number:	2
☐	leaching chambers	number:	
☐	leaching galleries	number:	
☐	leaching trenches	number, length:	
☐	leaching fields	number, dimensions:	
☐	overflow cesspool	number:	
☐	innovative/alternative system		

Type/name of technology:

Comments (note condition of soil, signs of hydraulic failure, level of ponding, damp soil, condition of vegetation, etc.):

SOIL GRAVELY, NO HYDRAULIC FAILURE
SOIL DRY, VEGETATION OK

Commonwealth of Massachusetts

Title 5 Official Inspection Form

Subsurface Sewage Disposal System Form - Not for Voluntary Assessments

Property Address: 746 BAY RD.

Owner's Name: WELD

Owner information is required for every page.

City/Town: AMHERST State: MASS Zip Code: 01002 Date of Inspection: 8/2/07

D. System Information (cont.)

Cesspools (cesspool must be pumped as part of inspection) (locate on site plan):

N/A

Number and configuration

Depth – top of liquid to inlet invert

Depth of solids layer

Depth of scum layer

Dimensions of cesspool

Materials of construction

Indication of groundwater inflow ☐ Yes ☐ No

Comments (note condition of soil, signs of hydraulic failure, level of ponding, condition of vegetation, etc.):

Privy (locate on site plan):

N/A

Materials of construction:

Dimensions

Depth of solids

Comments (note condition of soil, signs of hydraulic failure, level of ponding, condition of vegetation, etc.):

Commonwealth of Massachusetts

Title 5 Official Inspection Form

Subsurface Sewage Disposal System Form - Not for Voluntary Assessments

Property Address: 746 BAY RD.

Owner's Name: AL & D

Owner information is required for every page.

City/Town: AMHERST State: MASS Zip Code: 01002 Date of Inspection: 8/2/07

D. System Information (cont.)

Sketch Of Sewage Disposal System: Provide a sketch of the sewage disposal system including ties to at least two permanent reference landmarks or benchmarks. Locate all wells within 100 feet. Locate where public water supply enters the building.

BAY RD

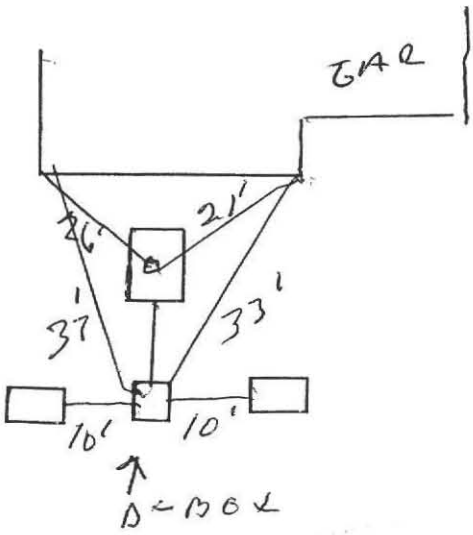

Commonwealth of Massachusetts

Title 5 Official Inspection Form

Subsurface Sewage Disposal System Form - Not for Voluntary Assessments

Property Address: 746 BAY RD

Owner's Name: WELD

Owner information is required for every page.

City/Town: AMHERST State: MASS Zip Code: 01002 Date of Inspection: 8/2/07

D. System Information (cont.)

Site Exam:

Slope NO

Surface water NONE

Check cellar OK

Shallow wells NO

Estimated depth to ground water: >6'

Please indicate all methods used to determine the high ground water elevation:

- [x] Obtained from system design plans on record

  If checked, date of design plan reviewed: _____ Date

- [ ] Observed site (abutting property/observation hole within 150 feet of SAS)
- [ ] Checked with local Board of Health - explain:
- [ ] Checked with local excavators, installers - (attach documentation)
- [ ] Accessed USGS database - explain:

You **must** describe how you established the high ground water elevation:

PRIOR TITLE V TEST HOLE

ALLEN WISE

TITLE 5

OFFICIAL INSPECTION FOR` - NOT FOR VOLUNTARY ASSESSMENTS
SUBSURFACE SEWAGE DISPOSAL SYSTEM FORM
PART A
CERTIFICATION

Property Address: **746 Bay Road, Amherst, MA**

Owner's Name: **Beverly Wood C/O Dee Waterman at Jones Real Estate, Amherst, MA**
Owner's Address: **81 State Street**
Amherst, Ma. 01002
Date of Inspection: **March29, 2001**

Name of Inspector: ***Alan E. Weiss, R.S # 933***
Company Name: ***Cold Spring Environmental Inc.***
Mailing Address: ***350 Old Enfield Road***
Belchertown, Massachusetts 01007
Telephone Number: **(413) 323-5957 fax: 413-323-4916**

CERTIFICATION STATEMENT

I certify that I have personally inspected the sewage disposal system at this address and that the information reported below is true, accurate and complete as of the time of the inspection. The inspection was performed based on my training and experience in the proper function and maintenance of on site sewage disposal systems. **I am a DEP approved system inspector pursuant to Section 15.340 of Title 5 (310 CMR 15.000).** The system:

X Passes
____ Conditionally Passes
____ Needs Further Evaluation by the Local Approving Authority
____ Fails

Inspector's Signature: _____ **Date:** **March 29, 2001**

The system inspector shall submit a copy of this inspection report to the Approving Authority (Board of Health or DEP) within 30 days of completing this inspection. If the system is a shared system or has a design flow of 10,000 gpd or greater, the inspector and the system owner shall submit the report to the appropriate regional office of the DEP. The original should be sent to the system owner and copies sent to the buyer, if applicable, and the approving authority.

COMMONWEALTH OF MASSACHUSETTS
ALAN E. WEISS
REG #933
REGISTERED SANITARIAN

Notes and Comments

Disposal on K. Sink Not Recommended!

******This report only describes conditions at the time of inspection and under the conditions of use at that time. This inspection does not address how the system will perform in the future under the same or different conditions of use.**

OFFICIAL INSPECTION FORM – NOT FOR VOLUNTARY ASSESSMENTS
SUBSURFACE SEWAGE DISPOSAL SYSTEM INSPECTION FORM
PART A
CERTIFICATION (continued)

Property Address: 746 BAY ROAD

Owner: WOOD
Date of Inspection: 3/29/01

Inspection Summary: Check A,B,C,D or E / ALWAYS complete all of Section D

A. System Passes:

✓ I have not found any information which indicates that any of the failure criteria described in 310 CMR 15.303 or in 310 CMR 15.304 exist. Any failure criteria not evaluated are indicated below.

Comments:
Level good at D-Box No stains above inlet.

B. System Conditionally Passes:

_____ One or more system components as described in the "Conditional Pass" section need to be replaced or repaired. The system, upon completion of the replacement or repair, as approved by the Board of Health, will pass.

Answer yes, no or not determined (Y,N,ND) in the ____ for the following statements. If "not determined" please explain.

_____ The septic tank is metal and over 20 years old* or the septic tank (whether metal or not) is structurally unsound, exhibits substantial infiltration or exfiltration or tank failure is imminent. System will pass inspection if the existing tank is replaced with a complying septic tank as approved by the Board of Health.
*A metal septic tank will pass inspection if it is structurally sound, not leaking and if a Certificate of Compliance indicating that the tank is less than 20 years old is available.

ND explain:

_____ Observation of sewage backup or break out or high static water level in the distribution box due to broken or obstructed pipe(s) or due to a broken, settled or uneven distribution box. System will pass inspection if (with approval of Board of Health):

____ broken pipe(s) are replaced
____ obstruction is removed
____ distribution box is leveled or replaced

ND explain:

_____ The system required pumping more than 4 times a year due to broken or obstructed pipe(s). The system will pass inspection if (with approval of the Board of Health):

____ broken pipe(s) are replaced
____ obstruction is removed

ND explain:

OFFICIAL INSPECTION FORM - NOT FOR VOLUNTARY ASSESSMENTS
SUBSURFACE SEWAGE DISPOSAL SYSTEM INSPECTION FORM
PART A
CERTIFICATION (continued)

Property Address: 746 BAY ROAD

Owner: WOOD

Date of Inspection: 3/29/01

C. Further Evaluation is Required by the Board of Health:

_____ Conditions exist which require further evaluation by the Board of Health in order to determine if the system is failing to protect public health, safety or the environment.

1. **System will pass unless Board of Health determines in accordance with 310 CMR 15.303(1)(b) that the system is not functioning in a manner which will protect public health, safety and the environment:**

   ___ Cesspool or privy is within 50 feet of a surface water
   ___ Cesspool or privy is within 50 feet of a bordering vegetated wetland or a salt marsh

2. **System will fail unless the Board of Health (and Public Water Supplier, if any) determines that the system is functioning in a manner that protects the public health, safety and environment:**

   ___ The system has a septic tank and soil absorption system (SAS) and the SAS is within 100 feet of a surface water supply or tributary to a surface water supply.

   ___ The system has a septic tank and SAS and the SAS is within a Zone 1 of a public water supply.

   ___ The system has a septic tank and SAS and the SAS is within 50 feet of a private water supply well.

   ___ The system has a septic tank and SAS and the SAS is less than 100 feet but 50 feet or more from a private water supply well**. Method used to determine distance _____

   **This system passes if the well water analysis, performed at a DEP certified laboratory, for coliform bacteria and volatile organic compounds indicates that the well is free from pollution from that facility and the presence of ammonia nitrogen and nitrate nitrogen is equal to or less than 5 ppm, provided that no other failure criteria are triggered. A copy of the analysis must be attached to this form.

3. **Other:**

   _____
   _____
   _____

OFFICIAL INSPECTION FORM – NOT FOR VOLUNTARY ASSESSMENTS
SUBSURFACE SEWAGE DISPOSAL SYSTEM INSPECTION FORM
PART A
CERTIFICATION (continued)

Property Address: 746 BAY RD

Owner: WOOD

Date of Inspection: 3/29/01

D. System Failure Criteria applicable to all systems:
You must indicate "yes" or "no" to each of the following for all inspections:

Yes	No	
___	___	Backup of sewage into facility or system component due to overloaded or clogged SAS or cesspool
___	___	Discharge or ponding of effluent to the surface of the ground or surface waters due to an overloaded or clogged SAS or cesspool
___	___	Static liquid level in the distribution box above outlet invert due to an overloaded or clogged SAS or cesspool
___	___	Liquid depth in cesspool is less than 6" below invert or available volume is less than ½ day flow
___	___	Required pumping more than 4 times in the last year NOT due to clogged or obstructed pipe(s). Number of times pumped ____.
___	___	Any portion of the SAS, cesspool or privy is below high ground water elevation.
___	___	Any portion of cesspool or privy is within 100 feet of a surface water supply or tributary to a surface water supply.
___	___	Any portion of a cesspool or privy is within a Zone 1 of a public well.
___	___	Any portion of a cesspool or privy is within 50 feet of a private water supply well.
___	✓	Any portion of a cesspool or privy is less than 100 feet but greater than 50 feet from a private water supply well with no acceptable water quality analysis. **[This system passes if the well water analysis, performed at a DEP certified laboratory, for coliform bacteria and volatile organic compounds indicates that the well is free from pollution from that facility and the presence of ammonia nitrogen and nitrate nitrogen is equal to or less than 5 ppm, provided that no other failure criteria are triggered. A copy of the analysis must be attached to this form.]**

No (Yes/No) The system fails. I have determined that one or more of the above failure criteria exist as described in 310 CMR 15.303, therefore the system fails. The system owner should contact the Board of Health to determine what will be necessary to correct the failure.

E. Large Systems:
To be considered a large system the system must serve a facility with a design flow of 10,000 gpd to 15,000 gpd.
You must indicate either "yes" or "no" to each of the following:
(The following criteria apply to large systems in addition to the criteria above)

yes	no	
___	___	the system is within 400 feet of a surface drinking water supply
___	___	the system is within 200 feet of a tributary to a surface drinking water supply
___	___	the system is located in a nitrogen sensitive area (Interim Wellhead Protection Area – IWPA) or a mapped Zone II of a public water supply well

If you have answered "yes" to any question in Section E the system is considered a significant threat, or answered "yes" in Section D above the large system has failed. The owner or operator of any large system considered a significant threat under Section E or failed under Section D shall upgrade the system in accordance with 310 CMR 15.304. The system owner should contact the appropriate regional office of the Department.

OFFICIAL INSPECTION FORM – NOT FOR VOLUNTARY ASSESSMENTS
SUBSURFACE SEWAGE DISPOSAL SYSTEM INSPECTION FORM
PART B
CHECKLIST

Property Address: 746 BAY RD

Owner: Wood
Date of Inspection: 3/29/01

Check if the following have been done. You **must** indicate "yes" or "no" as to each of the following:

Yes No

N/A Pumping information was provided by the owner, occupant, or Board of Health No records per BoH.

___ ✓ Were any of the system components pumped out in the previous two weeks ?

___ ✓ Has the system received normal flows in the previous two week period ? unoccupied

___ ✓ Have large volumes of water been introduced to the system recently or as part of this inspection ?

N/A Were as built plans of the system obtained and examined? (If they were not available note as N/A)

✓ ___ Was the facility or dwelling inspected for signs of sewage back up ?

✓ ___ Was the site inspected for signs of break out ?

✓ ___ Were all system components, excluding the SAS, located on site ?

✓ ___ Were the septic tank manholes uncovered, opened, and the interior of the tank inspected for the condition of the baffles or tees, material of construction, dimensions, depth of liquid, depth of sludge and depth of scum ?

✓ ___ Was the facility owner (and occupants if different from owner) provided with information on the proper maintenance of subsurface sewage disposal systems ?

The **size and location of the Soil Absorption System (SAS)** on the site has been determined based on:

Yes no

___ ___ Existing information. For example, a plan at the Board of Health.

✓ ___ Determined in the field (if any of the failure criteria related to Part C is at issue approximation **of distance** is unacceptable) [310 CMR 15.302(3)(b)]

OFFICIAL INSPECTION FORM – NOT FOR VOLUNTARY ASSESSMENTS
SUBSURFACE SEWAGE DISPOSAL SYSTEM INSPECTION FORM
PART C
SYSTEM INFORMATION

Property Address: 746 BAY RD.

Owner: Wood.
Date of Inspection: 3/29/01

FLOW CONDITIONS

RESIDENTIAL
Number of bedrooms (design): 3 Number of bedrooms (actual): 3 or 4
DESIGN flow based on 310 CMR 15.203 (for example: 110 gpd x # of bedrooms): _____
Number of current residents: 0
Does residence have a garbage grinder (yes or no): Yes Not (Recommended)
Is laundry on a separate sewage system (yes or no): N [if yes separate inspection required]
Laundry system inspected (yes or no): —
Seasonal use: (yes or no): No
Water meter readings, if available (last 2 years usage (gpd)): N/A. public Water
Sump pump (yes or no): N
Last date of occupancy: _____

COMMERCIAL/INDUSTRIAL
Type of establishment: _____
Design flow (based on 310 CMR 15.203): _____ gpd
Basis of design flow (seats/persons/sqft,etc.): _____
Grease trap present (yes or no): ___
Industrial waste holding tank present (yes or no): ___
Non-sanitary waste discharged to the Title 5 system (yes or no): ___
Water meter readings, if available: _____
Last date of occupancy/use: _____

OTHER (describe): _____

GENERAL INFORMATION

Pumping Records
Source of information: UNKnown
Was system pumped as part of the inspection (yes or no): ___
If yes, volume pumped: 1500 gallons -- How was quantity pumped determined? Measual
Reason for pumping: Requested.

TYPE OF SYSTEM
✓ Septic tank, distribution box, soil absorption system
___ Single cesspool
___ Overflow cesspool
___ Privy
___ Shared system (yes or no) (if yes, attach previous inspection records, if any)
___ Innovative/Alternative technology. Attach a copy of the current operation and maintenance contract (to be obtained from system owner)
___ Tight tank ___ Attach a copy of the DEP approval

___ Other (describe): _____

Approximate age of all components, date installed (if known) and source of information:
UNKnown

Were sewage odors detected when arriving at the site (yes or no): No

OFFICIAL INSPECTION FORM – NOT FOR VOLUNTARY ASSESSMENTS
SUBSURFACE SEWAGE DISPOSAL SYSTEM INSPECTION FORM
PART C
SYSTEM INFORMATION (continued)

Property Address: 746 BAY RD

Owner: wood
Date of Inspection: 3/29/01

BUILDING SEWER (locate on site plan)

Depth below grade: 12"
Materials of construction: ___cast iron ✓40 PVC ___other (explain): _____
Distance from private water supply well or suction line: 10'+
Comments (on condition of joints, venting, evidence of leakage, etc.):
OK

SEPTIC TANK: ✓ (locate on site plan)

Depth below grade: 18"
Material of construction: ✓concrete ___metal ___fiberglass ___polyethylene
___other(explain)_____
If tank is metal list age: ___ Is age confirmed by a Certificate of Compliance (yes or no): ___ (attach a copy of certificate)
Dimensions: 5'x 10.5'x 5' (1500g)
Sludge depth: 12"
Distance from top of sludge to bottom of outlet tee or baffle: 33"
Scum thickness: 3"
Distance from top of scum to top of outlet tee or baffle: 6"
Distance from bottom of scum to bottom of outlet tee or baffle: 12"
How were dimensions determined: Measured
Comments (on pumping recommendations, inlet and outlet tee or baffle condition, structural integrity, liquid levels as related to outlet invert, evidence of leakage, etc.):
OK., Sound, Baffles built in.

GREASE TRAP: N/A (locate on site plan)

Depth below grade: ___
Material of construction: ___concrete ___metal ___fiberglass ___polyethylene ___other (explain):_____
Dimensions: _____
Scum thickness: _____
Distance from top of scum to top of outlet tee or baffle: _____
Distance from bottom of scum to bottom of outlet tee or baffle: _____
Date of last pumping: _____
Comments (on pumping recommendations, inlet and outlet tee or baffle condition, structural integrity, liquid levels as related to outlet invert, evidence of leakage, etc.):

OFFICIAL INSPECTION FORM – NOT FOR VOLUNTARY ASSESSMENTS
SUBSURFACE SEWAGE DISPOSAL SYSTEM INSPECTION FORM
PART C
SYSTEM INFORMATION (continued)

Property Address: 746 BAY RD

Owner: WOOD
Date of Inspection: 3/29/01

TIGHT or HOLDING TANK: N (tank must be pumped at time of inspection)(locate on site plan)

Depth below grade: _____
Material of construction: ____concrete ____metal ____fiberglass ____polyethylene ____other(explain):

Dimensions: _____
Capacity: _____gallons
Design Flow: _____gallons/day
Alarm present (yes or no): _____
Alarm level: _____ Alarm in working order (yes or no): ____
Date of last pumping: _____
Comments (condition of alarm and float switches, etc.):

DISTRIBUTION BOX: Y (if present must be opened)(locate on site plan)

Depth of liquid level above outlet invert: _____
Comments (note if box is level and distribution to outlets equal, any evidence of solids carryover, any evidence of leakage into or out of box, etc.):
level at invert. No stains above invert. level outflows

PUMP CHAMBER: N/A (locate on site plan)

Pumps in working order (yes or no): ____
Alarms in working order (yes or no): ____
Comments (note condition of pump chamber, condition of pumps and appurtenances, etc.):

OFFICIAL INSPECTION FORM – NOT FOR VOLUNTARY ASSESSMENTS
SUBSURFACE SEWAGE DISPOSAL SYSTEM INSPECTION FORM
PART C
SYSTEM INFORMATION (continued)

Property Address: 746 BAY RD

Owner: WOOD
Date of Inspection: _____

SOIL ABSORPTION SYSTEM (SAS): Y **(locate on site plan, excavation not required)**

If SAS not located explain why:

Type
2 leaching pits, number: (4'x8') 500gal. ea. +/-
____ leaching chambers, number: ____
____ leaching galleries, number: ____
____ leaching trenches, number, length: _____
____ leaching fields, number, dimensions: _____
____ overflow cesspool, number: ____
____ innovative/alternative system Type/name of technology: _____
Comments (note condition of soil, signs of hydraulic failure, level of ponding, damp soil, condition of vegetation, etc.):
No SIGNS OF Failures, STONE OK., levels below INV

CESSPOOLS: ____ (cesspool must be pumped as part of inspection)(locate on site plan)

Number and configuration: _____
Depth – top of liquid to inlet invert: _____
Depth of solids layer: _____
Depth of scum layer: _____
Dimensions of cesspool: _____
Materials of construction: _____
Indication of groundwater inflow (yes or no): ____
Comments (note condition of soil, signs of hydraulic failure, level of ponding, condition of vegetation, etc.):

PRIVY: ____ (locate on site plan)

Materials of construction: _____
Dimensions: _____
Depth of solids: _____
Comments (note condition of soil, signs of hydraulic failure, level of ponding, condition of vegetation, etc.):

OFFICIAL INSPECTION FORM – NOT FOR VOLUNTARY ASSESSMENTS
SUBSURFACE SEWAGE DISPOSAL SYSTEM INSPECTION FORM
PART C
SYSTEM INFORMATION (continued)

Property Address: 746 BAY RD.

Owner: WOOD

Date of Inspection: 3/29/01

SKETCH OF SEWAGE DISPOSAL SYSTEM

Provide a sketch of the sewage disposal system including ties to at least two permanent reference landmarks or benchmarks. Locate all wells within 100 feet. Locate where public water supply enters the building.

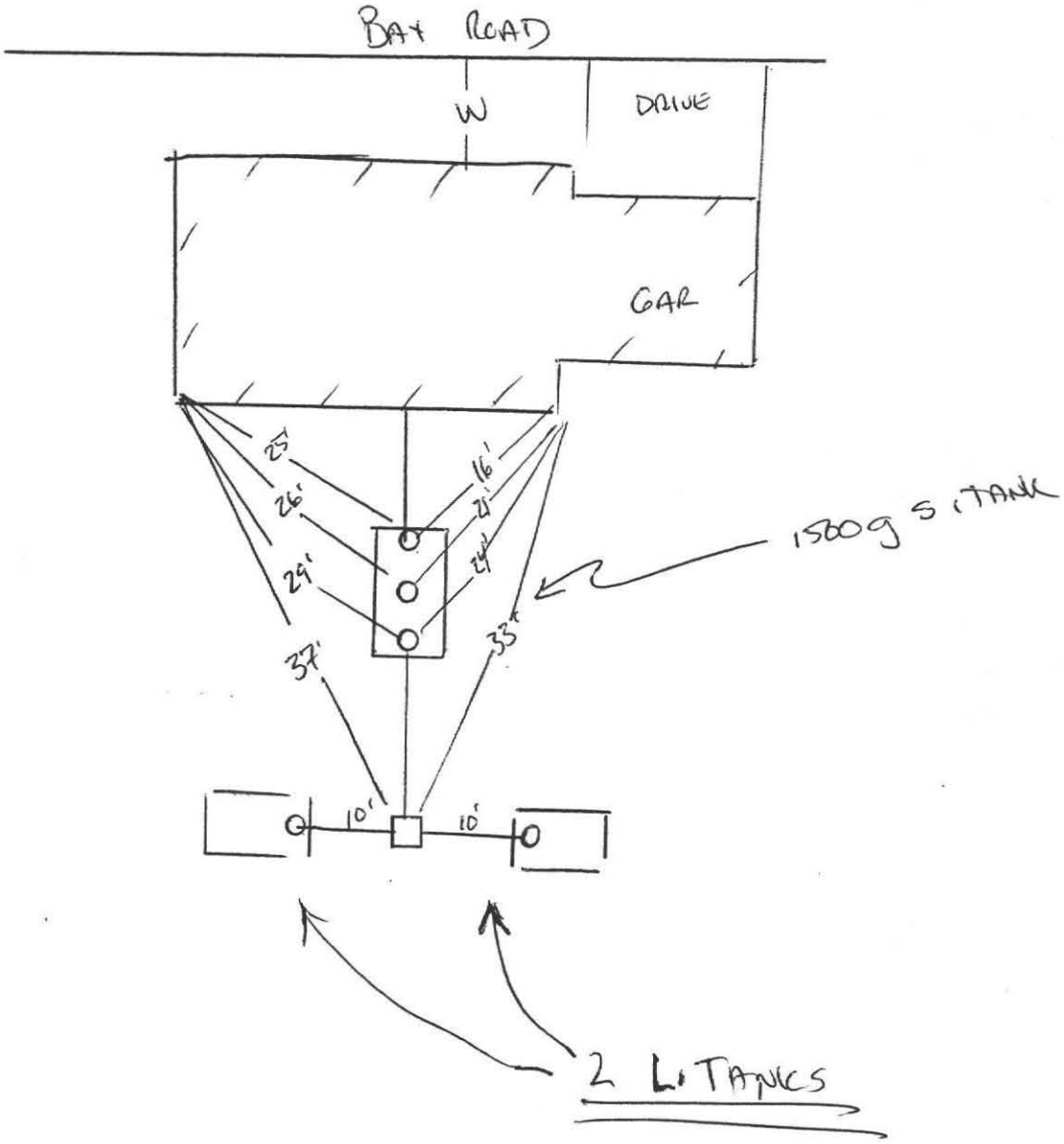

OFFICIAL INSPECTION FORM – NOT FOR VOLUNTARY ASSESSMENTS
SUBSURFACE SEWAGE DISPOSAL SYSTEM INSPECTION FORM
PART C
SYSTEM INFORMATION (continued)

Property Address: 746 BAY ROAD

Owner: WOOD

Date of Inspection: 3/29/01

SITE EXAM

Slope ✓
Surface water
Check cellar ✓
Shallow wells

Estimated depth to ground water 6'+ feet

Please indicate (check) all methods used to determine the high ground water elevation:

____ Obtained from system design plans on record - If checked, date of design plan reviewed: _____
✓ Observed site (abutting property/observation hole within 150 feet of SAS)
____ Checked with local Board of Health-explain: _____
____ Checked with local excavators, installers- (attach documentation)
____ Accessed USGS database-explain: _____

You must describe how you established the high ground water elevation:
- Auger hole to 4.5' at D.Box. - No g.w. (Sandy).