Property Location: 4 BALL LN | MAP ID: 5A/ / 57/ / | Bldg Name: | State Use: 1010

Vision ID: 5292 | Account # | Bldg #: 1 of 1 | Sec #: 1 of 1 | Card 1 of 1 | Print Date: 01/12/2017 11:57

CURRENT OWNER

WEBBER, DAVID K & PATRICIA A
C/O LABOMBARD, JEFFREY & SULLI
4 BALL LN

AMHERST, MA 01002
Additional Owners:

TOPO.	UTILITIES	STRT./ROAD	LOCATION
1 Level	2 Public Water	1 Paved	1 Urban
	3 Public Sewer		

SUPPLEMENTAL DATA

Other ID: 05A000057
Calc Frontag 114.3
BIDIN
BIDOUT
GIS ID: 5A-57

Precinct
Vote At
Tenant
Parent
Created
ASSOC PID#

CURRENT ASSESSMENT

Description	Code	Appraised Value	Assessed Value
RESIDNTL	1010	182,300	182,300
RES LAND	1010	108,200	108,200
Total		290,500	290,500

601
AMHERST, MA

VISION

RECORD OF OWNERSHIP

	BK-VOL/PAGE	SALE DATE	q/u	v/i	SALE PRICE	V.C.
LABOMBARD, JEFFREY & SULLIVAN, ERIN JEAN	12520/ 25	01/06/2017	Q	I	309,500	00
WEBBER, DAVID K & PATRICIA A	6088/0154	12/15/2000	Q	I	151,000	00
PERCIVAL, PENNY	4976/ 147	09/20/1996	Q	I	123,000	00
MATUSZKO, CARL T & JOYCE A	4771/ 86	11/08/1995	U	I	0	1A
MATUSZKO, THEODORE C	2400/ 133	10/21/1983	Q	I	54,500	00
MATUSZKO, CHESTER C & STELLA J	1475/ 359	01/01/1965	Q	I	0	00

PREVIOUS ASSESSMENTS (HISTORY)

Yr.	Code	Assessed Value	Yr.	Code	Assessed Value	Yr.	Code	Assessed Value
2017	1010	182,300	2016	1010	132,500	2015	1010	132,500
2017	1010	108,200	2016	1010	108,200	2015	1010	108,200
	Total:	290,500		Total:	240,700		Total:	240,700

EXEMPTIONS

Year	Type	Description	Amount
2017	ER	OWNER OCCUPIED	0.00
		Total:	0.00

OTHER ASSESSMENTS

Code	Description	Number	Amount	Comm. Int.

This signature acknowledges a visit by a Data Collector or Assessor

APPRAISED VALUE SUMMARY

Appraised Bldg. Value (Card)	179,300
Appraised XF (B) Value (Bldg)	3,000
Appraised OB (L) Value (Bldg)	0
Appraised Land Value (Bldg)	108,200
Special Land Value	0
Total Appraised Parcel Value	290,500
Valuation Method:	C
Exemptions	0
Adjustment:	0
Net Total Appraised Parcel Value	**290,500**

ASSESSING NEIGHBORHOOD

NBHD/ SUB	NBHD Name	Street Index Name	Tracing	Batch
NA/A				

NOTES

ADJUSTED UBM ADDED 2ND
BATH FOR FY98 DWB

BUILDING PERMIT RECORD

Permit ID	Issue Date	Type	Description	Amount	Insp. Date	% Comp.	Date Comp.	Comments
BLD04-578	04/09/2004	RE	Remodel	7,000		0		RESHINGLE ROOF

VISIT/ CHANGE HISTORY

Date	Type	IS	ID	Cd.	Purpose/Result
06/08/2016			LT	01	Estimate
02/22/2011			LT	43	Abatement Chg Reinspect
10/06/2009			LT	15	Drive By Field Review
10/26/2005			RD	15	Drive By Field Review
08/01/2001			DB	10	Refusal Letter Request No

LAND LINE VALUATION SECTION

B #	Use Code	Use Description	Zone	D	Front	Depth	Units		Unit Price	I. Factor	S.A.	Acre Disc	C. Factor	ST. Idx	Adj.	Notes- Adj	Special Pricing Spec Use	Special Pricing Spec Calc	S Adj Fact	Adj. Unit Price	Land Value
1	1010	Single Family	RN20				14,701	SF	8.66	0.8500	2	1.0000	1.00	NA	1.00				1.00		108,200

Total Card Land Units: 0.34 AC | Parcel Total Land Area: 0.34 AC | Total Land Value: 108,200

Property Location: 4 BALL LN | **MAP ID:** 5A/ / 57/ / | **Bldg Name:** | **State Use:** 1010

Vision ID: 5292 | **Account #** | **Bldg #:** 1 of 1 | **Sec #:** 1 of 1 | **Card** 1 of 1 | **Print Date:** 01/12/2017 11:57

CONSTRUCTION DETAIL

Element	Cd.	Ch.	Description
Style	52		Antique Coloni
Model	01		Residential
Grade	08		C
Stories	2		2 Stories
Occupancy	1		
Exterior Wall 1	11		Clapboard
Exterior Wall 2			
Roof Structure	03		Gable/Hip
Roof Cover	03		Asph/F Gls/Cmp
Interior Wall 1	03		Plaster/Skimc
Interior Wall 2	05		Drywall/Sheet
Interior Flr 1	12		Hardwood
Interior Flr 2			
Heat Fuel	02		Oil
Heat Type	06		Steam
AC Type	01		None
Total Bedrooms	03		3 Bedrooms
Total Bthrms	2		
Total Half Baths	0		
Total Xtra Fixtrs			
Total Rooms	7		
Bath Style	02		Average
Kitchen Style	02		Modern

CONSTRUCTION DETAIL (CONTINUED)

Element	Cd.	Ch.	Description
Foundation			

MIXED USE

Code	Description	Percentage
1010	Single Family	100

COST/MARKET VALUATION

Adj. Base Rate:	113.81
Replace Cost	239,005
AYB	1840
Dep Code	GD
Remodel Rating	
Year Remodeled	
Dep %	25
Functional Obslnc	0
External Obslnc	0
Cost Trend Factor	
Condition	
% Complete	
Overall % Cond	75
Apprais Val	179,300
Dep % Ovr	0
Dep Ovr Comment	
Misc Imp Ovr	0
Misc Imp Ovr Comment	
Cost to Cure Ovr	0
Cost to Cure Ovr Comment	

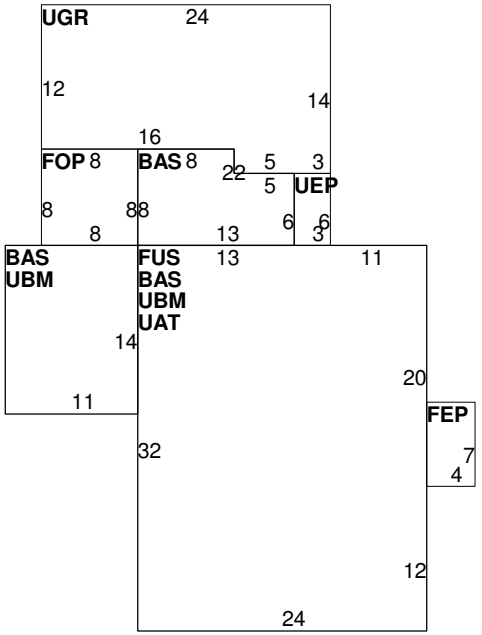

OB-OUTBUILDING & YARD ITEMS(L) / XF-BUILDING EXTRA FEATURES(B)

Code	Description	Sub	Sub Descript	L/B	Units	Unit Price	Yr	Gde	Dp Rt	Cnd	%Cnd	Apr Value
FPL3	Fireplace 2 St			B	1	4,000.00	1989		1		100	3,000

BUILDING SUB-AREA SUMMARY SECTION

Code	Description	Living Area	Gross Area	Eff. Area	Unit Cost	Undeprec. Value
BAS	First Floor	1,016	1,016	1,016	113.81	115,633
FEP	Porch, Enclosed, Finished	0	28	20	81.29	2,276
FOP	Porch, Open, Finished	0	64	13	23.12	1,480
FUS	Upper Story, Finished	768	768	691	102.40	78,644
UAT	Attic, Unfinished	0	768	77	11.41	8,764
UBM	Basement, Unfinished	0	922	184	22.71	20,941
UEP	Porch, Enclosed, Unfinished	0	18	8	50.58	910
UGR	Garage, Unfinished	0	304	91	34.07	10,357
	Ttl. Gross Liv/Lease Area:	1,784	3,888	2,100		239,005