Property Location: 29 LILAC LN | MAP ID: 6A/ / 104/ / | Bldg Name: | State Use: 1010

Vision ID: 4698 | Account # | Bldg #: 1 of 1 | Sec #: 1 of 1 | Card 1 of 1 | Print Date: 12/10/2015 21:07

CURRENT OWNER	TOPO.	UTILITIES	STRT./ROAD	LOCATION
HOLME, JENNIFER S & MILLER, ROB		2 Public Water		
29 LILAC LN		3 Public Sewer		
AMHERST, MA 01002				
Additional Owners:				

SUPPLEMENTAL DATA

Other ID: PINE MEADOW LOT 17
Calc Frontag
BIDIN
BIDOUT
GIS ID: 6A-104

Precinct
Vote At
Tenant
Parent
Created
ASSOC PID#

CURRENT ASSESSMENT

Description	Code	Appraised Value	Assessed Value
RESIDNTL	1010	234,200	234,200
RES LAND	1010	141,700	141,700
Total		375,900	375,900

601
AMHERST, MA

VISION

RECORD OF OWNERSHIP

	BK-VOL/PAGE	SALE DATE	q/u	v/i	SALE PRICE	V.C.
HOLME, JENNIFER S & MILLER, ROBYN J	6329/ 347	08/17/2001	Q	I	310,000	00
MACH, CAROLYN A	5249/ 133	11/25/1997	Q	I	217,000	00
WISOTZKY, MARK & WHITHAM,BLAIR	4809/ 72	01/16/1996	U	V	1	1A
WISOTZKY, MARK & LISA K	4458/ 347	04/14/1994	U	V	379,490	1G

PREVIOUS ASSESSMENTS (HISTORY)

Yr.	Code	Assessed Value	Yr.	Code	Assessed Value	Yr.	Code	Assessed Value
2016	1010	234,200	2015	1010	234,200	2014	1010	234,200
2016	1010	141,700	2015	1010	141,700	2014	1010	141,700
	Total:	375,900		Total:	375,900		Total:	361,400

EXEMPTIONS

Year	Type	Description	Amount
2008	ER	OWNER OCCUPIED	0.00
		Total:	0.00

OTHER ASSESSMENTS

Code	Description	Number	Amount	Comm. Int.

This signature acknowledges a visit by a Data Collector or Assessor

APPRAISED VALUE SUMMARY

Appraised Bldg. Value (Card)	230,900
Appraised XF (B) Value (Bldg)	3,300
Appraised OB (L) Value (Bldg)	0
Appraised Land Value (Bldg)	141,700
Special Land Value	0
Total Appraised Parcel Value	375,900
Valuation Method:	C
Exemptions	0
Adjustment:	0
Net Total Appraised Parcel Value	375,900

ASSESSING NEIGHBORHOOD

NBHD/ SUB	NBHD Name	Street Index Name	Tracing	Batch
CU/A				

NOTES

PARCEL TO BE SPLIT FOR
FY96
ECO STRUCTURES
CG GRADE,ADD DECK FY99
REM'D FUNC DEPR

BUILDING PERMIT RECORD

Permit ID	Issue Date	Type	Description	Amount	Insp. Date	% Comp.	Date Comp.	Comments
BLD13-0805	06/05/2013	RE	Remodel	3,956		0		ADD INSULATION
GAS13-0203	02/13/2013	PL	Plumbing	0		0		DRYER REPL
BLD13-0330	10/23/2012	RE	Remodel	17,000		0		REPL WINDOWS
BLD04-593	04/20/2004	RE	Remodel	3,383		0		FENCE
BLD99-587	03/25/1999	RE	Remodel	1,700		0		INSTALL F
GAS97-150	01/23/1997		GAS	0		0		FIREPLACE
ELE97-515	01/07/1997	EL	Electric	0		0		WIRE SFR

VISIT/ CHANGE HISTORY

Date	Type	IS	ID	Cd.	Purpose/Result
09/29/2010			LT	00	Measur+Listed
10/26/2005			RD	15	Drive By Field Review
08/10/2005			LT	01	Estimate
09/25/2001			LT	45	Sales Reinspection Du
02/05/1998			EB	43	Abatement Chg Reinspect

LAND LINE VALUATION SECTION

B #	Use Code	Use Description	Zone	D	Front	Depth	Units		Unit Price	I. Factor	S.A.	Acre Disc	C. Factor	ST. Idx	Adj.	Notes- Adj	Special Pricing Spec Use	Special Pricing Spec Calc	S Adj Fact	Adj. Unit Price	Land Value
1	1010	Single Family	RN20				20,005	SF	6.44	1.1000	6	1.0000	1.00	CU	1.00	LOT 17			1.00		141,700

Total Card Land Units: 0.46 AC | Parcel Total Land Area: 0.46 AC | Total Land Value: 141,700

Property Location: 29 LILAC LN **MAP ID:** 6A/ / 104/ / **Bldg Name:** **State Use:** 1010

Vision ID: 4698 **Account #** **Bldg #:** 1 of 1 **Sec #:** 1 of 1 **Card** 1 of 1 **Print Date:** 12/10/2015 21:07

CONSTRUCTION DETAIL

Element	Cd.	Ch.	Description
Style	03		Colonial
Model	01		Residential
Grade	13		A-
Stories	2		2 Stories
Occupancy	1		
Exterior Wall 1	25		Vinyl Siding
Exterior Wall 2			
Roof Structure	03		Gable/Hip
Roof Cover	03		Asph/F Gls/Cmp
Interior Wall 1	05		Drywall/Sheet
Interior Wall 2			
Interior Flr 1	12		Hardwood
Interior Flr 2	14		Carpet
Heat Fuel	02		Oil
Heat Type	05		Hot Water
AC Type	01		None
Total Bedrooms	04		4 Bedrooms
Total Bthrms	2		
Total Half Baths	1		
Total Xtra Fixtrs			
Total Rooms	8		8 Rooms
Bath Style	02		Average
Kitchen Style	02		Modern

CONSTRUCTION DETAIL (CONTINUED)

Element	Cd.	Ch.	Description
Foundation			

MIXED USE

Code	Description	Percentage
1010	Single Family	100

COST/MARKET VALUATION

Adj. Base Rate:	100.82
Replace Cost	250,930
AYB	1997
Dep Code	GD
Remodel Rating	
Year Remodeled	
Dep %	8
Functional Obslnc	0
External Obslnc	0
Cost Trend Factor	
Condition	
% Complete	
Overall % Cond	92
Apprais Val	230,900
Dep % Ovr	0
Dep Ovr Comment	
Misc Imp Ovr	0
Misc Imp Ovr Comment	
Cost to Cure Ovr	0
Cost to Cure Ovr Comment	

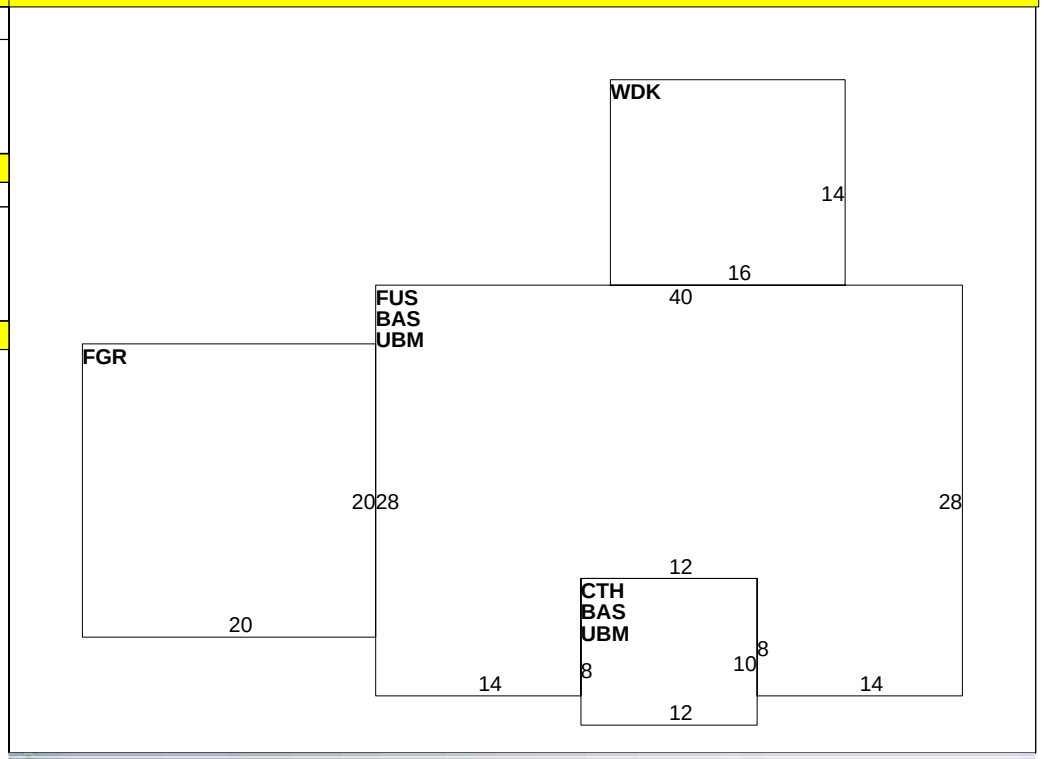

OB-OUTBUILDING & YARD ITEMS(L) / XF-BUILDING EXTRA FEATURES(B)

Code	Description	Sub	Sub Descript	L/B	Units	Unit Price	Yr	Gde	Dp Rt	Cnd	%Cnd	Apr Value
FLUG	Gas No Flue			B	1	2,000.00	2006		1		100	1,800
HTB	Hot Tub-Wood			B	1	1,600.00	2006		1		100	1,500

BUILDING SUB-AREA SUMMARY SECTION

Code	Description	Living Area	Gross Area	Eff. Area	Unit Cost	Undeprec. Value
BAS	First Floor	1,144	1,144	1,144	100.82	115,333
CTH	Cathedral Ceiling	0	120	12	10.08	1,210
FGR	Garage, Finished	0	400	160	40.33	16,130
FUS	Upper Story, Finished	1,024	1,024	922	90.77	92,952
UBM	Basement, Unfinished	0	1,144	229	20.18	23,087
WDK	Deck, Wood	0	224	22	9.90	2,218
	Ttl. Gross Liv/Lease Area:	2,168	4,056	2,489		250,930