Property Location 63-69 NORTH PLEASANT ST | Map ID 14A/ / 322/ / | Bldg Name | State Use 0310
Vision ID 3841 | Account # | Bldg # 1 | Sec # 1 of 1 | Card # 1 of 1 | Print Date 1/11/2024 4:43:52 PM

CURRENT OWNER

RARA REALTY LLC

63 N PLEASANT

AMHERST MA 01002

TOPO / UTILITIES / STRT / ROAD / LOCATION

1	Level						
4	Rolling						

SUPPLEMENTAL DATA

Alt PCL ID	14A000322	Precinct	
Calc Front		Vote At	
Prc_Usrfld		Tenant	
Prc_Usrfld		Parent	
BIDIN	BIDIN:	PRC Creat	
BIDOUT			
GIS ID	F_380694_2963937	Assoc PID#	

CURRENT ASSESSMENT

ASH Type Desc	ASH Co	Appraised	ASH Assessed
RESIDNTL	0104	249,375	249,375
RES LAND	0104	51,300	51,300
COMMERC.	0322	748,125	748,125
COM LAND	0322	153,900	153,900
	Total	1,202,700	1,202,700

601

AMHERST, MA

VISION

RECORD OF OWNERSHIP

	BK-VOL/PAGE		SALE DATE	Q/U	V/I	SALE PRICE	VC
RARA REALTY LLC	14439	295	01-31-2022	Q	I	1,240,000	00
GALLERIA REALTY CO LLC	6097	0099	12-29-2000	U	V	1	1A
ANIELLO, MAURO & CLAIRE	5108	0138	05-06-1997	U	I	755,000	1G
SANDLER, H RICHARD & JUDITH E	4906	0069	06-13-1996	U	I	1	1A
DICARLO,ROBERT D & BONITA ETAL	2374	0093	08-02-1983	Q	I	220,000	00

PREVIOUS ASSESSMENTS (HISTORY)

FY	ASH C	ASH Assesse	FY	ASH C	ASH Assesse	FY	ASH C	ASH Assess
2024	0104	249,375	2023	3260	716,200	2022	3260	684,700
	0104	51,300		3260	186,600		3260	139,400
	0322	748,125						
	0322	153,900						
	Total	1,202,700		Total	902,800		Total	824,100

EXEMPTIONS

EXE Yr	Ex Cod	Exemption Type	EXE Amount
2022	NO	NOT OWNER OCCUP	0.00
		Total	0.00

OTHER ASSESSMENTS

Other	Other Descr	Other #	Other $	Com Int

This signature acknowledges a visit by a Data Collector or Assessor

ASSESSING NEIGHBORHOOD

Nbhd	Nbhd Name	PRC Sub Div	Tracing #	Batch
5500				

NOTES

REST/ RETAIL/OFFICE/SPR1: BMST 1/26/22 LOT SPLIT SK

CLR1: LL LOW CEILING 5'8"

REAR LL W/O=59A, FL2=59B BOLTWOOD WALK

FL1: BISTRO 63 REST 63 N PLEASANT ST FL2 COUNTRY WIDE INS 67# DISOLVD 2006

FL2: MONKEY BAR REST SEATS 48 IN 26 OUT I&E NOT RTND FOR FY03; INT ALT 1983

FL2: DOWNTOWN MINDFULNESS 67 N PLEASANT

APPRAISED VALUE SUMMARY

Appraised Bldg. Value (Card)	993,900
Appraised Xf (B) Value (Bldg)	3,600
Appraised Ob (B) Value (Bldg)	0
Appraised Land Value (Bldg)	205,200
Special Land Value	0
Total Appraised Parcel Value	1,202,700
Valuation Method	C
Total Appraised Parcel Value	1,202,700

BUILDING PERMIT RECORD

Permit Id	BPE Issue	Permit T	BPE Desc	BPE Amoun	Insp Date	% Comp	BPE Date C	BPE Notes
BP-23-321	04-10-2023	RS	Residential	12,400		0		INST AUTO WET SPRINKLER
BP-23-38	01-16-2023	CM	Commercial	15,000		0		SMOKE DETECTOR, HEAT D
BP-22-92	02-07-2022	RE	Remodel	83,280		0		CONVERT 2ND FLR TO 4BB
PLM18-017	01-10-2018	PL	Plumbing	0		0		REPL DRAIN LINE TO BAR A
ELE17-0473	12-28-2016	EL	Electric	0		0		REPR WTR DAMAGE
BLD17-051	12-20-2016	RE	Remodel	15,000		0		REMOV & REPL DRYWALL &
ELE16-0532	01-05-2016	EL	Electric	0		0		LIGHT FIXTURE,OUTLET

VISIT / CHANGE HISTORY

Date	Id	Type	Is	Cd	Purpost/Result
07-13-2023	KM			04	Permit Review Estimated
08-09-2022	AA			03	Permit Review
03-11-2005	DB			43	Abatement Chg Reinspec
08-29-1995					
01-26-1987	A				

LAND LINE VALUATION SECTION

B	Use	Description	Zone	Land Type	Land Units		Unit Price	I. Factor	Site Index	Cond.	Nbhd.	Nhbd Adj	Notes	Location Adjustment		Adj Unit Pric	Land Value
1	0322	Store/Shop Com	BG10		5,438	SF	26.95	1.00000	C	1.00	5500	1.400			0		205,200
1	0104	Two Fam	BG10		0.000	AC	10,000.00	1.15000	C	1.00	5500	1.400			0		0
				Total Card Land Units	0.12	AC	Parcel Total Land Area:			0.12						Total Land Value	205,200

Property Location 63-69 NORTH PLEASANT ST | Map ID 14A/ / 322/ / | Bldg Name | State Use 0310
Vision ID 3841 | Account # | Bldg # 1 | Sec # 1 of 1 | Card # 1 of 1 | Print Date 1/11/2024 4:43:53 PM

CONSTRUCTION DETAIL

Element	Cd	Description
Style:	64	Commercial/Apts
Model	94	Commercial
Grade	17	AA
Stories:	2	
Occupancy	4.00	
Exterior Wall 1	11	Clapboard
Exterior Wall 2		
Roof Structure	03	Gable/Hip
Roof Cover	03	Asph/F Gls/Cmp
Interior Wall 1	05	Drywall/Sheet
Interior Wall 2		
Interior Floor 1	12	Hardwood
Interior Floor 2	14	Carpet
Heating Fuel	03	Gas
Heating Type	04	Forced Air-Duc
AC Type	03	Central
Bldg Use	0310	Pri Comm Com
Total Rooms		
Total Bedrms	4	
Total Baths	2	
Foundation		
Heat/AC	02	Heat/Ac Split
Frame Type	03	Masonry
Baths/Plumbing	02	Average
Ceiling/Wall	06	Ceil & Walls
Rooms/Prtns	02	Average
Wall Height	8.00	
% Comn Wall	0.00	
1st Floor Use:	3260	

CONSTRUCTION DETAIL (CONTINUED)

Element	Cd	Description

MIXED USE

Code	Description	Percentage
0322	Store/Shop Com	75
0104	Two Fam	25
		0

COST / MARKET VALUATION

RCN	1,274,216
Year Built	1965
Effective Year Built	
Depreciation Code	E
Remodel Rating	
Year Remodeled	
Depreciation %	22
Functional Obsol	0
External Obsol	0
Trend Factor	1
Condition	
Condition %	
Percent Good	78
RCNLD	993,900
Dep % Ovr	
Dep Ovr Comment	
Misc Imp Ovr	
Misc Imp Ovr Comment	
Cost to Cure Ovr	
Cost to Cure Ovr Comment	

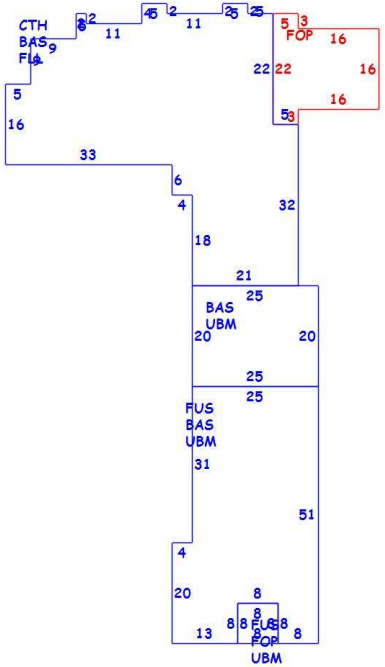

OB - OUTBUILDING & YARD ITEMS(L) / XF - BUILDING EXTRA FEATURES(B)

Code	Description	L/B	Units	Unit Price	Yr Blt	Cond. Cd	% Good	Grade	Grade Adj	Appr. Value
SPR1	Sprinklers-Wet	B	3,146	0.80	1995		78		0.00	2,000
CLR1	Cooler	B	100	20.00	1995		78		0.00	1,600

BUILDING SUB-AREA SUMMARY SECTION

Code	Description	Lease Area	Floor Area	Eff Area	Unit Cost	RCN
BAS	First Floor	3,832	3,832	3,832	164.76	631,342
CTH	Cathedral Ceiling	0	2,041	204	16.47	33,610
FLL	Finished Lower Level	1,429	2,041	1,429	115.35	235,435
FOP	Porch, Open, Finished	0	430	172	65.90	28,338
FUS	Upper Story, Finished	1,355	1,355	1,355	164.76	223,243
UBM	Basement, Unfinished	0	1,855	742	65.90	122,248
		6,616	11,554	7,734		1,274,216