Property Location: 115 BLACKBERRY LN | MAP ID: 9A/ / 44/ / | Bldg Name: | State Use: 1010

Vision ID: 3602 | Account # | Bldg #: 1 of 1 | Sec #: 1 of 1 | Card 1 of 1 | Print Date: 01/26/2016 15:08

CURRENT OWNER	TOPO.	UTILITIES	STRT./ROAD	LOCATION
SHI, ZIFAN & HU, HUANYE		2 Public Water		
115 BLACKBERRY LN		3 Public Sewer		
AMHERST, MA 01002				
Additional Owners:				

SUPPLEMENTAL DATA

Other ID:	HAWLEY MEADOWS I	Precinct
Calc Frontag	121.4	Vote At
	ER	Tenant
		Parent
BIDIN		Created
BIDOUT		
GIS ID: 9A-44		ASSOC PID#

CURRENT ASSESSMENT

Description	Code	Appraised Value	Assessed Value
RESIDNTL	1010	262,700	262,700
RES LAND	1010	129,100	129,100
Total		391,800	391,800

601 AMHERST, MA

VISION

RECORD OF OWNERSHIP

	BK-VOL/PAGE	SALE DATE	q/u	v/i	SALE PRICE	V.C.
SHI, ZIFAN & HU, HUANYE	11995/ 24	07/07/2015	Q	I	425,000	00
CAMDEVIREN, AYTAC	10588/ 70	06/30/2011	Q	I	390,000	00
MCGILL, GEORGE E	4268/ 56	08/03/1993		I	65,000	Y
PATTERSON, R K & JONES, P C	2426/ 233	02/10/1984			0	

PREVIOUS ASSESSMENTS (HISTORY)

Yr.	Code	Assessed Value	Yr.	Code	Assessed Value	Yr.	Code	Assessed Value
2016	1010	262,700	2015	1010	262,700	2014	1010	262,700
2016	1010	129,100	2015	1010	129,100	2014	1010	129,100
	Total:	391,800		Total:	391,800		Total:	376,500

EXEMPTIONS

Year	Type	Description	Amount
2015	ER	OWNER OCCUPIED	0.00
		Total:	0.00

OTHER ASSESSMENTS

Code	Description	Number	Amount	Comm. Int.

This signature acknowledges a visit by a Data Collector or Assessor

APPRAISED VALUE SUMMARY

Appraised Bldg. Value (Card)	260,000
Appraised XF (B) Value (Bldg)	2,700
Appraised OB (L) Value (Bldg)	0
Appraised Land Value (Bldg)	129,100
Special Land Value	0
Total Appraised Parcel Value	391,800
Valuation Method:	C
Exemptions	0
Adjustment:	0
Net Total Appraised Parcel Value	**391,800**

ASSESSING NEIGHBORHOOD

NBHD/ SUB	NBHD Name	Street Index Name	Tracing	Batch
CU/A				

NOTES

LOT # 39 31 32 33 34 35
26 25 24 23 22

BUILDING PERMIT RECORD

Permit ID	Issue Date	Type	Description	Amount	Insp. Date	% Comp.	Date Comp.	Comments
PLM04-012	07/09/2003	PL	Plumbing	0		0		DISHWASHER

VISIT/ CHANGE HISTORY

Date	Type	IS	ID	Cd.	Purpose/Result
08/18/2010			LT	00	Measur+Listed
09/14/2009			LT	15	Drive By Field Review
10/26/2005			RD	15	Drive By Field Review
07/07/1994			EB		

LAND LINE VALUATION SECTION

B #	Use Code	Use Description	Zone	D	Front	Depth	Units		Unit Price	I. Factor	S.A.	Acre Disc	C. Factor	ST. Idx	Adj.	Notes- Adj	Special Pricing Spec Use	Special Pricing Spec Calc	S Adj Fact	Adj. Unit Price	Land Value
1	1010	Single Family	RN20		120		20,000	SF	6.44	1.0000	4	1.0000	1.00	CU	1.00				1.00		128,800
1	1010	Single Family	RN21				2,644	SF	0.12	1.0000	0	1.0000	1.00	CU	1.00				1.00		300

Total Card Land Units: 0.52 AC | Parcel Total Land Area: 0.52 AC | Total Land Value: 129,100

Property Location: 115 BLACKBERRY LN **MAP ID:** 9A/ / 44/ / **Bldg Name:** **State Use:** 1010

Vision ID: 3602 **Account #** **Bldg #:** 1 of 1 **Sec #:** 1 of 1 **Card** 1 of 1 **Print Date:** 01/26/2016 15:08

CONSTRUCTION DETAIL

Element	Cd.	Ch.	Description
Style	01		Ranch
Model	01		Residential
Grade	15		A+
Stories	1		1 Story
Occupancy	1		
Exterior Wall 1	12		Cedar Or Redwd
Exterior Wall 2			
Roof Structure	03		Gable/Hip
Roof Cover	03		Asph/F Gls/Cmp
Interior Wall 1	05		Drywall/Sheet
Interior Wall 2			
Interior Flr 1	12		Hardwood
Interior Flr 2			
Heat Fuel	02		Oil
Heat Type	05		Hot Water
AC Type	03		Central
Total Bedrooms	03		3 Bedrooms
Total Bthrms	2		
Total Half Baths	1		
Total Xtra Fixtrs			
Total Rooms	10		10 Rooms
Bath Style	02		Average
Kitchen Style	02		Modern

CONSTRUCTION DETAIL (CONTINUED)

Element	Cd.	Ch.	Description
Foundation			

MIXED USE

Code	Description	Percentage
1010	Single Family	100

COST/MARKET VALUATION

Adj. Base Rate:	101.97
Replace Cost	288,895
AYB	1994
Dep Code	GD
Remodel Rating	
Year Remodeled	
Dep %	10
Functional Obslnc	0
External Obslnc	0
Cost Trend Factor	
Condition	
% Complete	
Overall % Cond	90
Apprais Val	260,000
Dep % Ovr	0
Dep Ovr Comment	
Misc Imp Ovr	0
Misc Imp Ovr Comment	
Cost to Cure Ovr	0
Cost to Cure Ovr Comment	

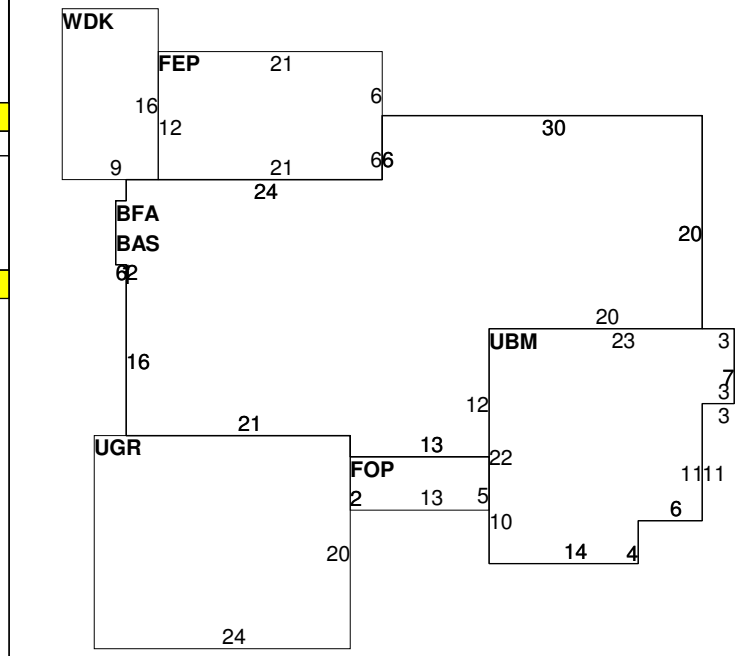

OB-OUTBUILDING & YARD ITEMS(L) / XF-BUILDING EXTRA FEATURES(B)

Code	Description	Sub	Sub Descript	L/B	Units	Unit Price	Yr	Gde	Dp Rt	Cnd	%Cnd	Apr Value
FPL1	Fireplace 1 St			B	1	3,000.00	2004		1		100	2,700

BUILDING SUB-AREA SUMMARY SECTION

Code	Description	Living Area	Gross Area	Eff. Area	Unit Cost	Undeprec. Value
BAS	First Floor	1,745	1,745	1,745	101.97	177,946
BFA	Basement Fin Li	916	1,308	654	50.99	66,692
FEP	Porch, Enclosed, Finished	0	252	176	71.22	17,948
FOP	Porch, Open, Finished	0	65	13	20.39	1,326
UBM	Basement, Unfinished	0	437	87	20.30	8,872
UGR	Garage, Unfinished	0	480	144	30.59	14,684
WDK	Deck, Wood	0	144	14	9.91	1,428
	Ttl. Gross Liv/Lease Area:	2,661	4,431	2,833		288,895