**Property Location:** 26 MT PLEASANT | **MAP ID:** 11A/ / 82/ / | **Bldg Name:** | **State Use:** 1010

**Vision ID:** 7161 | **Account #** 1253 | **Bldg #:** 1 of 1 | **Sec #:** 1 of 1 | **Card** 1 of 1 | **Print Date:** 01/17/2006 09:33

| CURRENT OWNER | TOPO. | UTILITIES | STRT./ROAD | LOCATION |
|---|---|---|---|---|
| DUBACH, JOHN F & GILOTH, COPPI | | 2 Public Water | | |
| 26 MT PLEASANT | | 3 Public Sewer | | |
| AMHERST, MA 01002 | | | | |

Additional Owners:

**SUPPLEMENTAL DATA**

| | | | |
|---|---|---|---|
| Other ID: | 11A000082 | Precinct | |
| Calc Frontag | 20 | School | |
| Owner Occupi | YES | | |

GIS ID: 11A-82 | ASSOC PID#

**CURRENT ASSESSMENT**

| Description | Code | Appraised Value | Assessed Value |
|---|---|---|---|
| RESIDNTL | 1010 | 388,400 | 388,400 |
| RES LAND | 1010 | 155,300 | 155,300 |
| | Total | 543,700 | 543,700 |

601 AMHERST, MA

**VISION**

**RECORD OF OWNERSHIP**

| | BK-VOL/PAGE | SALE DATE | q/u | v/i | SALE PRICE | V.C. |
|---|---|---|---|---|---|---|
| DUBACH, JOHN F & GILOTH, COPPER F | 6140/ 173 | 03/08/2001 | Q | I | 350,000 | 00 |
| LINDSEY, CARRA N | 900/ 367 | 01/01/1981 | | | 0 | |

**PREVIOUS ASSESSMENTS (HISTORY)**

| Yr. | Code | Assessed Value | Yr. | Code | Assessed Value | Yr. | Code | Assessed Value |
|---|---|---|---|---|---|---|---|---|
| 2006 | 1010 | 388,400 | 2005 | 1010 | 327,500 | 2004 | 1010 | 242,800 |
| 2006 | 1010 | 155,300 | 2005 | 1010 | 123,000 | 2004 | 1010 | 101,200 |
| | Total: | 543,700 | | Total: | 450,500 | | Total: | 344,000 |

**EXEMPTIONS**

| Year | Type | Description | Amount |
|---|---|---|---|
| 2006 | ER | OWNER OCCUPIED | 0 |
| | | Total: | 0 |

**OTHER ASSESSMENTS**

| Code | Description | Number | Amount | Comm. Int. |
|---|---|---|---|---|
| | | | | |

*This signature acknowledges a visit by a Data Collector or Assessor*

**ASSESSING NEIGHBORHOOD**

| NBHD/ SUB | NBHD NAME | STREET INDEX NAME | TRACING | BATCH |
|---|---|---|---|---|
| CE/A | | | | |

**NOTES**

FULL DORMER REAR SUN
ROOM ADDED 1983
FY02 HS IS IN GD COND
WELL BUILT NAT WOOD
ADDED FEP TO UEP

**APPRAISED VALUE SUMMARY**

| | |
|---|---|
| Appraised Bldg. Value (Card) | 383,000 |
| Appraised XF (B) Value (Bldg) | 5,400 |
| Appraised OB (L) Value (Bldg) | 0 |
| Appraised Land Value (Bldg) | 155,300 |
| Special Land Value | 0 |
| Total Appraised Parcel Value | 543,700 |
| Valuation Method: | C |
| Adjustment: | 0 |
| **Net Total Appraised Parcel Value** | **543,700** |

**BUILDING PERMIT RECORD**

| Permit ID | Issue Date | Type | Description | Amount | Insp. Date | % Comp. | Date Comp. | Comments |
|---|---|---|---|---|---|---|---|---|
| 831263 | 09/30/1983 | | | 7,000 | | 0 | | |

**VISIT/ CHANGE HISTORY**

| Date | Type | IS | ID | Cd. | Purpose/Result |
|---|---|---|---|---|---|
| 10/20/2005 | | | SS | 15 | DRIVE BY FIELD REVI |
| 10/9/2001 | | | LT | 45 | Sales Reinspection c |
| 10/20/1990 | | | HG | | |

**LAND LINE VALUATION SECTION**

| B # | Use Code | Use Description | Zone | D | Frontage | Depth | Units | | Unit Price | I. Factor | S.A. | Acre Disc | C. Factor | ST. Idx | Adj. | Notes- Adj | Special Pricing | | Adj. Unit Price | Land Value |
|---|---|---|---|---|---|---|---|---|---|---|---|---|---|---|---|---|---|---|---|---|
| 1 | 1010 | SINGLE FAM MDL-01 | RG10 | | | | 12,000 | SF | 8.88 | 1.25 | 7 | 1.0000 | 1.00 | CE | 1.15 | | | | 12.77 | 153,200 |
| 1 | 1010 | SINGLE FAM MDL-01 | RG11 | | | | 25,897 | SF | 0.07 | 1.00 | 0 | 1.0000 | 1.00 | CE | 1.15 | | | | 0.08 | 2,100 |

Total Card Land Units: 37,897 SF | Parcel Total Land Area: 37,897 SF | Total Land Value: 155,300

**Property Location:** 26 MT PLEASANT | **MAP ID:** 11A/ / 82/ / | **Bldg Name:** | **State Use:** 1010

**Vision ID:** 7161 | **Account #** 1253 | **Bldg #:** 1 of 1 **Sec #:** 1 of 1 **Card** 1 of 1 | **Print Date:** 01/17/2006 09:33

## CONSTRUCTION DETAIL

| Element | Cd. | Ch. | Description |
|---|---|---|---|
| Style | 52 | | Antique Coloni |
| Model | 01 | | Residential |
| Grade | 30 | | Grade = 150% |
| Stories | 2 | | 2 Stories |
| Occupancy | | | |
| Exterior Wall 1 | 11 | | Clapboard |
| Exterior Wall 2 | 20 | | Brick/Masonry |
| Roof Structure | 05 | | Salt Box |
| Roof Cover | 11 | | Slate |
| Interior Wall 1 | 03 | | Plaster/SkimC |
| Interior Wall 2 | | | |
| Interior Flr 1 | 12 | | Hardwood |
| Interior Flr 2 | | | |
| Heat Fuel | 02 | | Oil |
| Heat Type | 04 | | Forced Air-Duc |
| AC Type | 01 | | None |
| Total Bedrooms | 06 | | 6 Bedrooms |
| Total Bthrms | 3 | | |
| Total Half Baths | 0 | | |
| Total Xtra Fixtrs | | | |
| Total Rooms | 10 | | 10 Rooms |
| Bath Style | 02 | | Average |
| Kitchen Style | 02 | | Modern |

## CONSTRUCTION DETAIL (CONTINUED)

| Element | Cd. | Ch. | Description |
|---|---|---|---|
| Foundation | | | |

## MIXED USE

| Code | Description | Percentage |
|---|---|---|
| 1010 | SINGLE FAM MDL-01 | 100 |

## COST/MARKET VALUATION

| | |
|---|---|
| Adj. Base Rate: | 180.63 |
| Section. RCN: | 571,694 |
| Net Other Adj: | 0.00 |
| Replace Cost | 571,694 |
| AYB | 1925 |
| EYB | 1972 |
| Dep Code | AV |
| Remodel Rating | |
| Year Remodeled | |
| Dep % | 33 |
| Functional Obslnc | 0 |
| External Obslnc | 0 |
| Cost Trend Factor | 1 |
| Status | |
| % Complete | |
| Overall % Cond | 67 |
| Apprais Val | 383,000 |
| Dep % Ovr | 0 |
| Dep Ovr Comment | |
| Misc Imp Ovr | 0 |
| Misc Imp Ovr Comment | |
| Cost to Cure Ovr | 0 |
| Cost to Cure Ovr Comment | |

UGR[280]

UBM[308]

FBM[550]

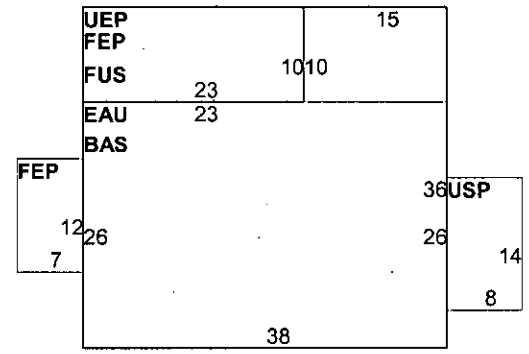


## OB-OUTBUILDING & YARD ITEMS(L) / XF-BUILDING EXTRA FEATURES(B)

| Code | Description | Sub | Sub Descript | L/B | Units | Unit Price | Yr | Gde | Dp Rt | Cnd | %Cnd | Apr Value |
|---|---|---|---|---|---|---|---|---|---|---|---|---|
| FPL3 | FIREPLACE 2 | | | B | 2 | 4,000.00 | 1972 | | 1 | | 100 | 5,400 |

## BUILDING SUB-AREA SUMMARY SECTION

| Code | Description | Living Area | Gross Area | Eff. Area | Unit Cost | Undreprec. Value |
|---|---|---|---|---|---|---|
| BAS | First Floor | 1,138 | 1,138 | 1,138 | 180.63 | 205,557 |
| EAU | Attic, Expansion, Unfinished | 0 | 988 | 99 | 18.10 | 17,882 |
| FBM | Basement, Finished | 0 | 550 | 193 | 63.38 | 34,862 |
| FEP | Porch, Enclosed, Finished | 0 | 314 | 220 | 126.56 | 39,739 |
| FUS | Upper Story, Finished | 1,231 | 1,368 | 1,231 | 162.54 | 222,356 |
| UBM | Basement, Unfinished | 0 | 308 | 62 | 36.36 | 11,199 |
| UEP | Porch, Enclosed, Unfinished | 0 | 230 | 104 | 81.68 | 18,786 |
| UGR | Garage, Unfinished | 0 | 280 | 84 | 54.19 | 15,173 |
| USP | Porch, Screen, Unfinished | 0 | 112 | 34 | 54.83 | 6,141 |
| | Ttl. Gross Liv/Lease Area: | 2,369 | 5,288 | 3,165 | | 571,694 |

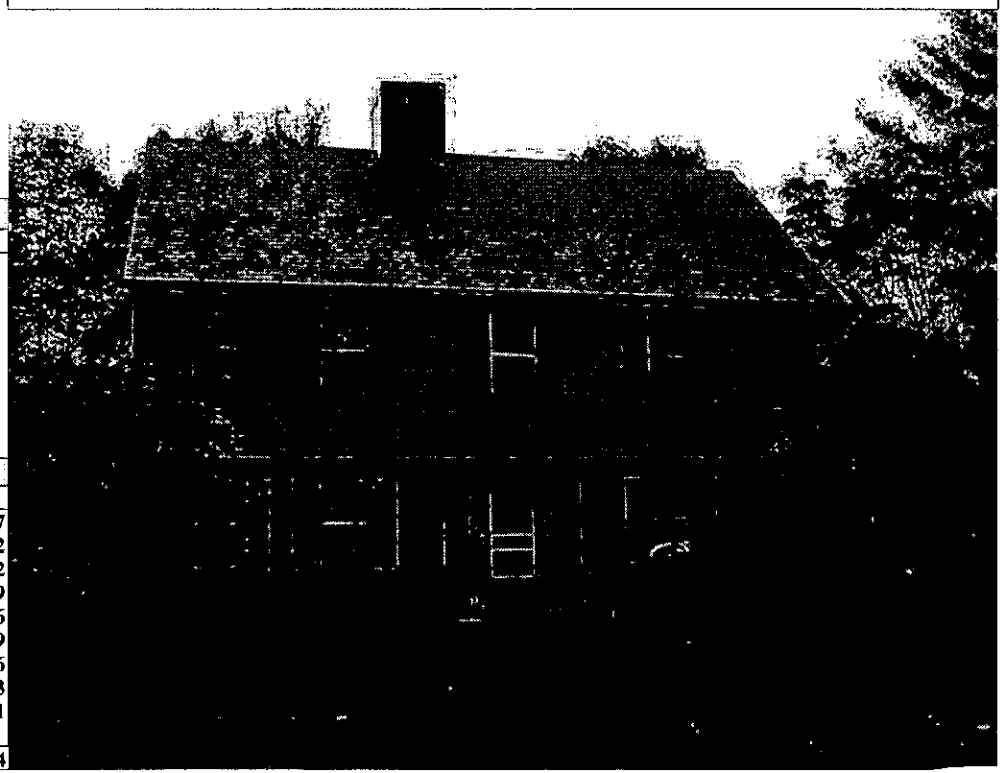

**Property Location:** 26 MT PLEASANT
**Vision ID:** 7161

**MAP ID:** 11A/ / 82/ /
**Other ID:** 11A000082

**Bldg #:** 1 **Card** 1 **of** 1 **Print Date:** 12/02/2003 12:27

## CURRENT OWNER

DUBACH, JOHN F & GILOTH, COPPER F

26 MT PLEASANT
AMHERST, MA 01002

**Additional Owners:**

| TOPO. | UTILITIES | STRT./ROAD | LOCATION |
|---|---|---|---|
| | 2 Public Wate | | |
| | 3 Public Sewe | | |

## SUPPLEMENTAL DATA

Account # 1253 PRECINCT

Owner Occupi

PHOTO

**GIS ID:** 11A-82

## CURRENT ASSESSMENT

| Description | Code | Appraised Value | Assessed Value |
|---|---|---|---|
| RES LAND | 1010 | 101,200 | 101,200 |
| RESIDNTL | 1010 | 242,800 | 242,800 |
| Total | | 344,000 | 344,000 |

601
AMHERST, MA

# VISION

## RECORD OF OWNERSHIP

| | BK-VOL/PAGE | SALE DATE | q/u | v/i | SALE PRICE | V.C. |
|---|---|---|---|---|---|---|
| DUBACH, JOHN F & GILOTH, COPPER F | 6140/ 173 | 03/08/2001 | Q | I | 350,000 | 00 |
| LINDSEY, CARRA N | 900/ 367 | 01/01/1981 | | | 0 | |

## PREVIOUS ASSESSMENTS (HISTORY)

| Yr. | Code | Assessed Value | Yr. | Code | Assessed Value | Yr. | Code | Assessed Value |
|---|---|---|---|---|---|---|---|---|
| 2004 | 1010 | 101,200 | 2003 | 1010 | 95,900 | 2002 | 1010 | 73,900 |
| 2004 | 1010 | 242,800 | 2003 | 1010 | 242,800 | 2002 | 1010 | 233,100 |
| | Total: | 344,000 | | Total: | 338,700 | | Total: | 307,000 |

## EXEMPTIONS

| Year | Type/Description | Amount |
|---|---|---|
| | | |
| | Total: | |

## OTHER ASSESSMENTS

| Code | Description | Number | Amount | Comm. Int. |
|---|---|---|---|---|
| | | | | |

*This signature acknowledges a visit by a Data Collector or Assessor*

## APPRAISED VALUE SUMMARY

| | |
|---|---|
| Appraised Bldg. Value (Card) | 237,400 |
| Appraised XF (B) Value (Bldg) | 5,400 |
| Appraised OB (L) Value (Bldg) | 0 |
| Appraised Land Value (Bldg) | 101,200 |
| Special Land Value | |
| Total Appraised Card Value | 344,000 |
| Total Appraised Parcel Value | 344,000 |
| Valuation Method: | Cost/Market Valuation |
| **Net Total Appraised Parcel Value** | 344,000 |

## NOTES

FULL DORMER REAR SUN
ROOM ADDED 1983
FY02 HS IS IN GD COND
WELL BUILT NAT WOOD
ADDED FEP TO UEP

## BUILDING PERMIT RECORD

| Permit ID | Issue Date | Type | Description | Amount | Insp. Date | % Comp. | Date Comp. | Comments |
|---|---|---|---|---|---|---|---|---|
| 831263 | 9/30/1983 | | | 7,000 | | 0 | | |

## VISIT/CHANGE HISTORY

| Date | ID | Cd. | Purpose/Result |
|---|---|---|---|
| 10/9/2001 | LT | 45 | Sales Reinspection c |
| 10/20/1990 | HG | | |

## LAND LINE VALUATION SECTION

| B# | Use Code | Description | Zone | D | Frontage | Depth | Units | | Unit Price | I. Factor | S.I. | C. Factor | Nbhd. | Adj. | Notes- Adj/Special Pricing | Adj. Unit Price | Land Value |
|---|---|---|---|---|---|---|---|---|---|---|---|---|---|---|---|---|---|
| 1 | 1010 | SINGLE FAM | RG10 | | | | 12,000.00 | SF | 6.00 | 1.30 | 7 | 1.00 | CE | 1.05 | | 8.22 | 98,600 |
| 1 | 1010 | SINGLE FAM | RG11 | | | | 25,897.00 | SF | 0.07 | 1.30 | 0 | 1.00 | CE | 1.05 | | 0.10 | 2,600 |
| | | | | | | Total Card Land Units | 0.87 | AC | Parcel Total Land Area: | | | 0.87 AC | | | | Total Land Value | 101,200 |

**Property Location:** 26 MT PLEASANT
**Vision ID:** 7161

**MAP ID:** 11A/ / 82/ /
**Other ID:** 11A000082

**Bldg #:** 1 **Card** 1 **of** 1 **Print Date:** 12/02/2003 12

## CONSTRUCTION DETAIL

| Element | Cd. | Ch. | Description |
|---|---|---|---|
| Style/ Type | 52 | | Antique Coloni |
| Model | 01 | | Residential |
| Grade | 32 | | Grade = 160% |
| Stories | 2 | | 2 Stories |
| Occupancy | 00 | | |
| Exterior Wall 1 | 11 | | Clapboard |
| 2 | 20 | | Brick/Masonry |
| Roof Structure | 05 | | Salt Box |
| Roof Cover | 11 | | Slate |
| Interior Wall 1 | 03 | | Plaster/SkimC |
| 2 | | | |
| Interior Floor 1 | 12 | | Hardwood |
| 2 | | | |
| Heating Fuel | 02 | | Oil |
| Heating Type | 04 | | Forced Air-Duc |
| AC Type | 01 | | None |
| Bedrooms | 06 | | 6 Bedrooms |
| Bathrooms | 3 | | 3 Bathrooms |
| Total Rooms | 10 | | 10 Rooms |
| Bath Type | 02 | | Modern |
| Kitchen Style | 02 | | Modern |

### Commercial Data Elements

| Element | Cd. | Ch. | Description |
|---|---|---|---|
| Heat & AC | | | |
| Frame Type | | | |
| Baths/Plumbing | | | |
| Ceiling/Wall | | | |
| Rooms/Prtns | | | |
| % Common Wall | | | |
| Wall Height | | | |

### CONDO/MOBILE HOME DATA

| Element | Code | Description | Factor |
|---|---|---|---|
| Complex | | | |
| Floor Adj | | | |
| Unit Location | | | |
| Number of Units | | | |
| Number of Levels | | | |
| % Ownership | | | |

### COST/MARKET VALUATION

| | |
|---|---|
| Unadj. Base Rate | 70.00 |
| Size Adj. Factor | 0.89329 |
| Grade (Q) Index | 1.79 |
| Adj. Base Rate | 111.93 |
| Bldg. Value New | 354,258 |
| Year Built | 1925 |
| Eff. Year Built | (AV) |
| Nrml Physcl Dep | 33 |
| Funcnl Obslnc | 0 |
| Econ Obslnc | 0 |
| Specl. Cond. Code | |
| Specl Cond % | |
| Overall % Cond. | 67 |
| Deprec. Bldg Value | 237,400 |

### MIXED USE

| Code | Description | Percentage |
|---|---|---|
| 1010 | SINGLE FAM | 100 |

## SKETCH

UGR[280]
UBM[308]
FBM[550]

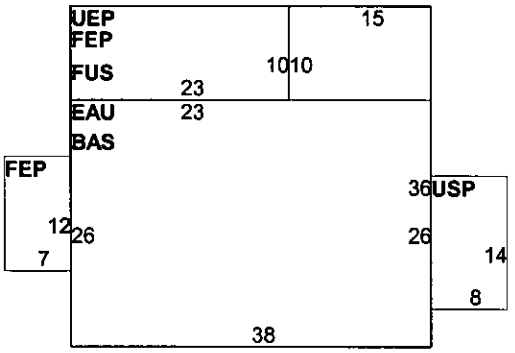

## OB-OUTBUILDING & YARD ITEMS(L) / XF-BUILDING EXTRA FEATURES(B)

| Code | Description | L/B | Units | Unit Price | Yr. | Dp Rt | %Cnd | Apr. Value |
|---|---|---|---|---|---|---|---|---|
| FPL3 | FIREPLACE 2 ST | B | 2 | 4,000.00 | 1969 | 1 | 100 | 5,400 |

## BUILDING SUB-AREA SUMMARY SECTION

| Code | Description | Living Area | Gross Area | Eff. Area | Unit Cost | Undeprec. Value |
|---|---|---|---|---|---|---|
| BAS | First Floor | 1,138 | 1,138 | 1,138 | 111.93 | 127,376 |
| EAU | Attic, Expansion, Unfinished | 0 | 988 | 99 | 11.22 | 11,081 |
| FBM | Basement, Finished | 0 | 550 | 193 | 39.28 | 21,602 |
| FEP | Porch, Enclosed, Finished | 0 | 314 | 220 | 78.42 | 24,625 |
| FUS | Upper Story, Finished | 1,231 | 1,368 | 1,231 | 100.72 | 137,786 |
| UBM | Basement, Unfinished | 0 | 308 | 62 | 22.53 | 6,940 |
| UEP | Porch, Enclosed, Unfinished | 0 | 230 | 104 | 50.61 | 11,641 |
| UGR | Garage, Unfinished | 0 | 280 | 84 | 33.58 | 9,402 |
| USP | Porch, Screen, Unfinished | 0 | 112 | 34 | 33.98 | 3,806 |
| Ttl. Gross Liv/Lease Area | | 2,369 | 5,288 | 3,165 | Bldg Val: | 354,258 |

**Property Location:** 26 MT PLEASANT **MAP ID:** 11A/ / 82/ /
**Vision ID:** 7161 **Other ID:** 11A000082 **Bldg #:** 1 **Card** 1 **of** 1 **Print Date:** 12/30/2004 11:41

| CURRENT OWNER | TOPO. | UTILITIES | STRT./ROAD | LOCATION |
|---|---|---|---|---|
| DUBACH, JOHN F & GILOTH, COPPER F | | 2 Public Wate | | |
| | | 3 Public Sewe | | |
| 26 MT PLEASANT | | | | |
| AMHERST, MA 01002 | | | | |

Additional Owners:

**SUPPLEMENTAL DATA**

Account # Precinct
School
Owner Occupi YES

GIS ID: 11A-82

**CURRENT ASSESSMENT**

| Description | Code | Appraised Value | Assessed Value |
|---|---|---|---|
| RES LAND | 1010 | 123,000 | 123,000 |
| RESIDNTL | 1010 | 327,500 | 327,500 |
| Total | | 450,500 | 450,500 |

601
AMHERST, MA

# VISION

**RECORD OF OWNERSHIP**

| | BK-VOL/PAGE | SALE DATE | q/u | v/i | SALE PRICE | V.C. |
|---|---|---|---|---|---|---|
| DUBACH, JOHN F & GILOTH, COPPER F | 6140/ 173 | 03/08/2001 | Q | I | 350,000 | 00 |
| LINDSEY, CARRA N | 900/ 367 | 01/01/1981 | | | 0 | |

**PREVIOUS ASSESSMENTS (HISTORY)**

| Yr. | Code | Assessed Value | Yr. | Code | Assessed Value | Yr. | Code | Assessed Value |
|---|---|---|---|---|---|---|---|---|
| 2005 | 1010 | 123,000 | 2004 | 1010 | 101,200 | 2003 | 1010 | 95,900 |
| 2005 | 1010 | 327,500 | 2004 | 1010 | 242,800 | 2003 | 1010 | 242,800 |
| | Total: | 450,500 | | Total: | 344,000 | | Total: | 338,700 |

**EXEMPTIONS**

| Year | Type/Description | Amount |
|---|---|---|
| | | |
| | Total: | |

**OTHER ASSESSMENTS**

| Code | Description | Number | Amount | Comm. Int. |
|---|---|---|---|---|
| | | | | |

*This signature acknowledges a visit by a Data Collector or Assessor*

**APPRAISED VALUE SUMMARY**

| | |
|---|---|
| Appraised Bldg. Value (Card) | 322,100 |
| Appraised XF (B) Value (Bldg) | 5,400 |
| Appraised OB (L) Value (Bldg) | 0 |
| Appraised Land Value (Bldg) | 123,000 |
| Special Land Value | |
| Total Appraised Card Value | 450,500 |
| Total Appraised Parcel Value | 450,500 |
| Valuation Method: | Cost/Market Valuation |
| **Net Total Appraised Parcel Value** | **450,500** |

**NOTES**

FULL DORMER REAR SUN
ROOM ADDED 1983
FY02 HS IS IN GD COND
WELL BUILT NAT WOOD
ADDED FEP TO UEP

**BUILDING PERMIT RECORD**

| Permit ID | Issue Date | Type | Description | Amount | Insp. Date | % Comp. | Date Comp. | Comments |
|---|---|---|---|---|---|---|---|---|
| 831263 | 9/30/1983 | | | 7,000 | | 0 | | |

**VISIT/CHANGE HISTORY**

| Date | ID | Cd. | Purpose/Result |
|---|---|---|---|
| 10/9/2001 | LT | 45 | Sales Reinspection ( |
| 10/20/1990 | HG | | |

**LAND LINE VALUATION SECTION**

| B# | Use Code | Description | Zone | D | Frontage | Depth | Units | | Unit Price | I. Factor | S.I. | C. Factor | Nbhd. | Adj. | Notes- Adj/Special Pricing | Adj. Unit Price | Land Value |
|---|---|---|---|---|---|---|---|---|---|---|---|---|---|---|---|---|---|
| 1 | 1010 | SINGLE FAM | RG10 | | | | 12,000.00 | SF | 7.37 | 1.30 | 7 | 1.00 | CE | 1.05 | | 10.10 | 121,200 |
| 1 | 1010 | SINGLE FAM | RG11 | | | | 25,897.00 | SF | 0.07 | 1.00 | 0 | 1.00 | CE | 1.05 | | 0.07 | 1,800 |
| | | | | | | Total Card Land Units | 37,897.00 | SF | Parcel Total Land Area: | | | 37,897 SF | | | | Total Land Value | 123,000 |

**Property Location:** 26 MT PLEASANT
**Vision ID:** 7161

**MAP ID:** 11A/ / 82/ /
**Other ID:** 11A000082

**Bldg #:** 1 **Card** 1 **of** 1 **Print Date:** 12/30/2004 11

## CONSTRUCTION DETAIL

| Element | Cd. | Ch. | Description |
|---|---|---|---|
| Style/ Type | 52 | | Antique Coloni |
| Model | 01 | | Residential |
| Grade | 32 | | Grade = 160% |
| Stories | 2 | | 2 Stories |
| Occupancy | 00 | | |
| Exterior Wall 1 | 11 | | Clapboard |
| 2 | 20 | | Brick/Masonry |
| Roof Structure | 05 | | Salt Box |
| Roof Cover | 11 | | Slate |
| Interior Wall 1 | 03 | | Plaster/SkimC |
| 2 | | | |
| Interior Floor 1 | 12 | | Hardwood |
| 2 | | | |
| Heating Fuel | 02 | | Oil |
| Heating Type | 04 | | Forced Air-Duc |
| AC Type | 01 | | None |
| Bedrooms | 06 | | 6 Bedrooms |
| Bathrooms | 3 | | 3 Bathrooms |
| Total Rooms | 10 | | 10 Rooms |
| Bath Type | 02 | | Modern |
| Kitchen Style | 02 | | Modern |

### Commercial Data Elements

| Element | Cd. | Ch. | Description |
|---|---|---|---|
| Heat & AC | | | |
| Frame Type | | | |
| Baths/Plumbing | | | |
| Ceiling/Wall | | | |
| Rooms/Prtns | | | |
| % Common Wall | | | |
| Wall Height | | | |

### CONDO/MOBILE HOME DATA

| Element | Code | Description | Factor |
|---|---|---|---|
| Complex | | | |
| Floor Adj | | | |
| Unit Location | | | |
| Number of Units | | | |
| Number of Levels | | | |
| % Ownership | | | |

### COST/MARKET VALUATION

| | |
|---|---|
| Unadj. Base Rate | 95.00 |
| Size Adj. Factor | 0.89329 |
| Grade (Q) Index | 1.79 |
| Adj. Base Rate | 151.90 |
| Bldg. Value New | 480,764 |
| Year Built | 1925 |
| Eff. Year Built | (AV) 1970 |
| Nrml Physcl Dep | 33 |
| Funcnl Obslnc | 0 |
| Econ Obslnc | 0 |
| Specl. Cond. Code | |
| Specl Cond % | |
| Overall % Cond. | 67 |
| Deprec. Bldg Value | 322,100 |

### MIXED USE

| Code | Description | Percentage |
|---|---|---|
| 1010 | SINGLE FAM | 100 |

## SKETCH

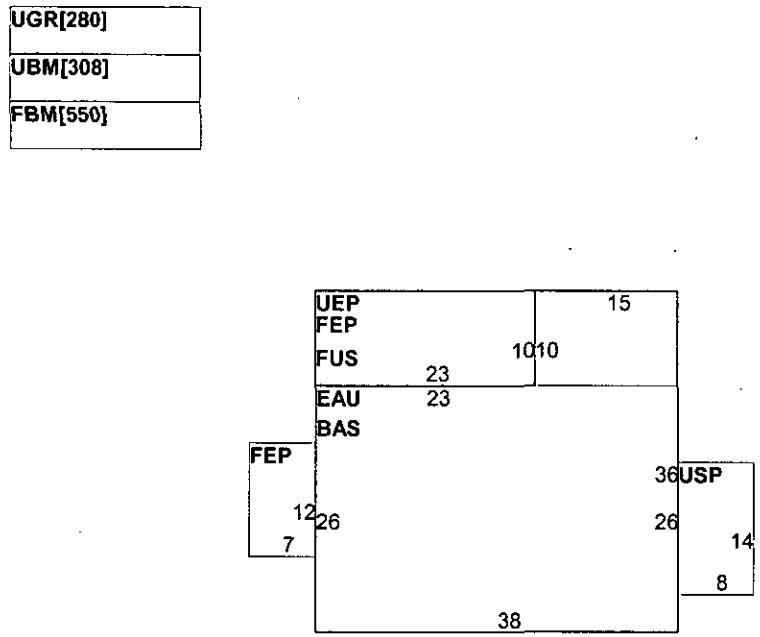

## OB-OUTBUILDING & YARD ITEMS(L) / XF-BUILDING EXTRA FEATURES(B)

| Code | Description | L/B | Units | Unit Price | Yr. | Dp Rt | %Cnd | Apr. Value |
|---|---|---|---|---|---|---|---|---|
| FPL3 | FIREPLACE 2 ST | B | 2 | 4,000.00 | 1970 | 1 | 100 | 5,400 |

## BUILDING SUB-AREA SUMMARY SECTION

| Code | Description | Living Area | Gross Area | Eff. Area | Unit Cost | Undeprec. Value |
|---|---|---|---|---|---|---|
| BAS | First Floor | 1,138 | 1,138 | 1,138 | 151.90 | 172,862 |
| EAU | Attic, Expansion, Unfinished | 0 | 988 | 99 | 15.22 | 15,038 |
| FBM | Basement, Finished | 0 | 550 | 193 | 53.30 | 29,317 |
| FEP | Porch, Enclosed, Finished | 0 | 314 | 220 | 106.43 | 33,418 |
| FUS | Upper Story, Finished | 1,231 | 1,368 | 1,231 | 136.69 | 186,989 |
| UBM | Basement, Unfinished | 0 | 308 | 62 | 30.58 | 9,418 |
| UEP | Porch, Enclosed, Unfinished | 0 | 230 | 104 | 68.69 | 15,798 |
| UGR | Garage, Unfinished | 0 | 280 | 84 | 45.57 | 12,760 |
| USP | Porch, Screen, Unfinished | 0 | 112 | 34 | 46.11 | 5,165 |
| Ttl. Gross Liv/Lease Area | | 2,369 | 5,288 | 3,165 | Bldg Val: | 480,764 |

**Property Location:** 26 MT PLEASANT **MAP ID:** 11A/ / 82/ /
**Vision ID:** 7161 **Other ID:** 11A000082 **Bldg #:** 1 **Card** 1 **of** 1 **Print Date:** 12/01/2000

| CURRENT OWNER | TOPO. | UTILITIES | STRT./ROAD | LOCATION |
|---|---|---|---|---|
| LINDSEY, CARRA N | | 2 Public Water | | |
| 26 MT PLEASANT | | 3 Public Sewer | | |
| AMHERST, MA 01002 | | | | |

**SUPPLEMENTAL DATA**

Account # PRECINCT

PHOTO

GIS ID:

**CURRENT ASSESSMENT**

| Description | Code | Appraised Value | Assessed Value |
|---|---|---|---|
| RES LAND | 1010 | 73,900 | 73,900 |
| RESIDNTL | 1010 | 188,200 | 188,200 |
| Total | | 262,100 | 262,100 |

601
AMHERST, MA

# VISION

**RECORD OF OWNERSHIP**

| | BK-VOL/PAGE | SALE DATE | q/u | v/i | SALE PRICE | V.C. |
|---|---|---|---|---|---|---|
| LINDSEY, CARRA N | 900/ 367 | 01/01/1981 | | | 0 | |

**PREVIOUS ASSESSMENTS (HISTORY)**

| Yr. | Code | Assessed Value | Yr. | Code | Assessed Value | Yr. | Code | Assessed Value |
|---|---|---|---|---|---|---|---|---|
| 2001 | 1010 | 73,900 | 2000 | 1010 | 73,900 | 1999 | 1010 | 64,800 |
| 2001 | 1010 | 188,200 | 2000 | 1010 | 188,200 | 1999 | 1010 | 169,000 |
| | Total: | 262,100 | | Total: | 262,100 | | Total: | 233,800 |

**EXEMPTIONS**

| Year | Type/Description | Amount |
|---|---|---|
| | | |
| | Total: | |

**OTHER ASSESSMENTS**

| Code | Description | Number | Amount | Comm. Int. |
|---|---|---|---|---|
| | | | | |

*This signature acknowledges a visit by a Data Collector or Assessor*

**APPRAISED VALUE SUMMARY**

| | |
|---|---|
| Appraised Bldg. Value (Card) | 181,800 |
| Appraised XF (B) Value (Bldg) | 6,400 |
| Appraised OB (L) Value (Bldg) | 0 |
| Appraised Land Value (Bldg) | 73,900 |
| Special Land Value | |
| Total Appraised Card Value | 262,100 |
| Total Appraised Parcel Value | 262,100 |
| Valuation Method: | Cost/Market Valuation |
| **Net Total Appraised Parcel Value** | 262,100 |

**NOTES**

**BUILDING PERMIT RECORD**

| Permit ID | Issue Date | Type | Description | Amount | Insp. Date | % Comp. | Date Comp. | Comments |
|---|---|---|---|---|---|---|---|---|
| 831263 | 9/30/83 | | | 7,000 | | 0 | | |

**VISIT/CHANGE HISTORY**

| Date | ID | Cd. | Purpose/Result |
|---|---|---|---|
| 10/20/90 | HG | | |

**LAND LINE VALUATION SECTION**

| B# | Use Code | Description | Zone | D | Frontage | Depth | Units | | Unit Price | I. Factor | S.I. | C. Factor | Nbhd. | Adj. | Notes- Adj/Special Pricing | Adj. Unit Price | Land Value |
|---|---|---|---|---|---|---|---|---|---|---|---|---|---|---|---|---|---|
| 1 | 1010 | SINGLE FAM | RG10 | | | | 12,000.00 | SF | 5.20 | 1.15 | 0 | 1.00 | CE | 1.00 | | 5.98 | 71,800 |
| 1 | 1010 | SINGLE FAM | RG11 | | | | 25,897.00 | SF | 0.07 | 1.15 | 0 | 1.00 | CE | 1.00 | | 0.08 | 2,100 |
| | | | | | | Total Card Land Units | 37,897.00 | SF | Parcel Total Land Area: | | | 37,897 SF | | | | Total Land Value | 73,900 |

**Property Location:** 26 MT PLEASANT
**Vision ID:** 7161

**MAP ID:** 11A/ / 82/ /
**Other ID:** 11A000082

**Bldg #:** 1 **Card** 1 **of** 1 **Print Date:** 12/01/2000

## CONSTRUCTION DETAIL

| Element | Cd. | Ch. | Description |
|---|---|---|---|
| Style/ Type | 03 | | Colonial |
| Model | 01 | | Residential |
| Grade | 28 | | Grade = 140% |
| Stories | 2 | | 2 Stories |
| Occupancy | 00 | | |
| Exterior Wall 1 | 11 | | Clapboard |
| 2 | | | |
| Roof Structure | 05 | | Salt Box |
| Roof Cover | 11 | | Slate |
| Interior Wall 1 | 03 | | Plaster/SkimC |
| 2 | | | |
| Interior Floor 1 | 12 | | Hardwood |
| 2 | | | |
| Heating Fuel | 02 | | Oil |
| Heating Type | 04 | | Forced Air-Duc |
| AC Type | 01 | | None |
| Bedrooms | 06 | | 6 Bedrooms |
| Bathrooms | 3 | | 3 Bathrooms |
| Total Rooms | 10 | | 10 Rooms |
| Bath Type | 02 | | Modern |
| Kitchen Style | 02 | | Modern |

### Commercial Data Elements

| Element | Cd. | Ch. | Description |
|---|---|---|---|
| Heat & AC | | | |
| Frame Type | | | |
| Baths/Plumbing | | | |
| Ceiling/Wall | | | |
| Rooms/Prtns | | | |
| % Common Wall | | | |
| Wall Height | | | |

### CONDO/MOBILE HOME DATA

| Element | Code | Description | Factor |
|---|---|---|---|
| Complex | | | |
| Floor Adj | | | |
| Unit Location | | | |
| Number of Units | | | |
| Number of Levels | | | |
| % Ownership | | | |

### COST/MARKET VALUATION

| | |
|---|---|
| Unadj. Base Rate | 56.00 |
| Size Adj. Factor | 0.88302 |
| Grade (Q) Index | 1.53 |
| Adj. Base Rate | 75.66 |
| Bldg. Value New | 227,283 |
| Year Built | 1925 |
| Eff. Year Built | |
| Nrml Physcl Dep | 20 |
| Funcnl Obslnc | 0 |
| Econ Obslnc | 0 |
| Specl. Cond. Code | |
| Specl Cond % | |
| Overall % Cond. | 80 |
| Deprec. Bldg Value | 181,800 |

### MIXED USE

| Code | Description | Percentage |
|---|---|---|
| 1010 | SINGLE FAM | 100 |

## SKETCH

| |
|---|
| UGR[280] |
| UBM[308] |
| FBM[550] |
| FUS[1368] |

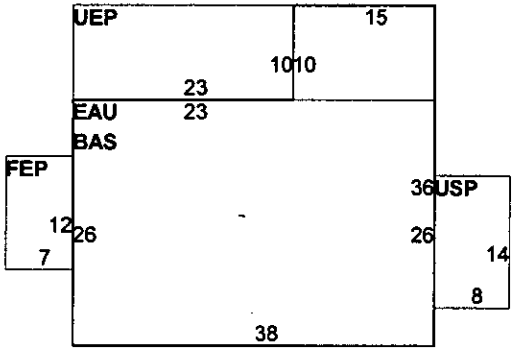


## OB-OUTBUILDING & YARD ITEMS(L) / XF-BUILDING EXTRA FEATURES(B)

| Code | Description | L/B | Units | Unit Price | Yr. | Dp Rt | %Cnd | Apr. Value |
|---|---|---|---|---|---|---|---|---|
| FPL3 | FIREPLACE 2 ST | B | 2 | 3,500.00 | 1991 | 1 | 100 | 6,400 |

## BUILDING SUB-AREA SUMMARY SECTION

| Code | Description | Living Area | Gross Area | Eff. Area | Unit Cost | Undeprec. Value |
|---|---|---|---|---|---|---|
| BAS | First Floor | 1,138 | 1,138 | 1,138 | 75.66 | 86,101 |
| EAU | Attic, Expansion, Unfinished | 0 | 988 | 99 | 7.58 | 7,490 |
| FBM | Basement, Finished | 0 | 550 | 193 | 26.55 | 14,602 |
| FEP | Porch, Enclosed, Finished | 0 | 84 | 59 | 53.14 | 4,464 |
| FUS | Upper Story, Finished | 1,231 | 1,368 | 1,231 | 68.08 | 93,137 |
| UBM | Basement, Unfinished | 0 | 308 | 62 | 15.23 | 4,691 |
| UEP | Porch, Enclosed, Unfinished | 0 | 230 | 104 | 34.21 | 7,869 |
| UGR | Garage, Unfinished | 0 | 280 | 84 | 22.70 | 6,355 |
| USP | Porch, Screen, Unfinished | 0 | 112 | 34 | 22.97 | 2,572 |
| Ttl. Gross Liv/Lease Area | | 2,369 | 5,058 | 3,004 | Bldg Val: | 227,283 |

**Property Location:** 26 MT PLEASANT
**Vision ID:** 7161

**MAP ID:** 11A/ / 82/ /
**Other ID:** 11A000082

**Bldg #:** 1 **Card** 1 **of** 1 **Print Date:** 01/03/2002 08:01

| CURRENT OWNER | TOPO. | UTILITIES | STRT./ROAD | LOCATION |
|---|---|---|---|---|
| DUBACH, JOHN F & GILOTH, COPPER F | | 2 Public Wate | | |
| | | 3 Public Sewe | | |

26 MT PLEASANT
AMHERST, MA 01002

Additional Owners:

**SUPPLEMENTAL DATA**

Account # PRECINCT

Owner Occupi

PHOTO

GIS ID:

**CURRENT ASSESSMENT**

| Description | Code | Appraised Value | Assessed Value |
|---|---|---|---|
| RES LAND | 1010 | 73,900 | 73,900 |
| RESIDNTL | 1010 | 233,100 | 233,100 |
| Total | | 307,000 | 307,000 |

601
AMHERST, MA

# VISION

**RECORD OF OWNERSHIP**

| | BK-VOL/PAGE | SALE DATE | q/u | v/i | SALE PRICE | V.C. |
|---|---|---|---|---|---|---|
| DUBACH, JOHN F & GILOTH, COPPER F | 6140/ 173 | 03/08/2001 | Q | I | 350,000 | 00 |
| LINDSEY, CARRA N | 900/ 367 | 01/01/1981 | | | 0 | |

**PREVIOUS ASSESSMENTS (HISTORY)**

| Yr. | Code | Assessed Value | Yr. | Code | Assessed Value | Yr. | Code | Assessed Value |
|---|---|---|---|---|---|---|---|---|
| 2002 | 1010 | 73,900 | 2001 | 1010 | 73,900 | 2000 | 1010 | 73,9 |
| 2002 | 1010 | 233,100 | 2001 | 1010 | 188,200 | 2000 | 1010 | 188,2 |
| | Total: | 307,000 | | Total: | 262,100 | | Total: | 262,1 |

**EXEMPTIONS**

| Year | Type/Description | Amount |
|---|---|---|
| | | |
| | Total: | |

**OTHER ASSESSMENTS**

| Code | Description | Number | Amount | Comm. Int. |
|---|---|---|---|---|
| | | | | |

*This signature acknowledges a visit by a Data Collector or Assesso*

**APPRAISED VALUE SUMMARY**

| | |
|---|---|
| Appraised Bldg. Value (Card) | 226,7 |
| Appraised XF (B) Value (Bldg) | 6,4 |
| Appraised OB (L) Value (Bldg) | |
| Appraised Land Value (Bldg) | 73,9 |
| Special Land Value | |
| Total Appraised Card Value | 307,0 |
| Total Appraised Parcel Value | 307,0 |
| Valuation Method: | Cost/Market Valuat |
| Exemptions | |
| **Net Total Appraised Parcel Value** | 307,0 |

**NOTES**

**BUILDING PERMIT RECORD**

| Permit ID | Issue Date | Type | Description | Amount | Insp. Date | % Comp. | Date Comp. | Comments |
|---|---|---|---|---|---|---|---|---|
| 831263 | 9/30/83 | | | 7,000 | | 0 | | |

**VISIT/CHANGE HISTORY**

| Date | ID | Cd. | Purpose/Result |
|---|---|---|---|
| 10/9/01 | LT | 45 | Sales Reinspectio |
| 10/20/90 | HG | | |

**LAND LINE VALUATION SECTION**

| B# | Use Code | Description | Zone | D | Frontage | Depth | Units | | Unit Price | I. Factor | S.I. | C. Factor | Nbhd. | Adj. | Notes- Adj/Special Pricing | Adj. Unit Price | Land Value |
|---|---|---|---|---|---|---|---|---|---|---|---|---|---|---|---|---|---|
| 1 | 1010 | SINGLE FAM | RG10 | | | | 12,000.00 | SF | 5.20 | 1.15 | 0 | 1.00 | CE | 1.00 | | 5.98 | 71,8 |
| 1 | 1010 | SINGLE FAM | RG11 | | | | 25,897.00 | SF | 0.07 | 1.15 | 0 | 1.00 | CE | 1.00 | | 0.08 | 2,1 |
| | | | | | | Total Card Land Units | 0.87 | AC | Parcel Total Land Area: | | | 0.87 AC | | | | Total Land Value | 73,9 |

**Property Location:** 26 MT PLEASANT
**Vision ID:** 7161

**MAP ID:** 11A/ / 82/ /
**Other ID:** 11A000082

**Bldg #:** 1 **Card** 1 **of** 1 **Print Date:** 01/03/2002 08

## CONSTRUCTION DETAIL

| Element | Cd. | Ch. | Description |
|---|---|---|---|
| Style/ Type | 03 | | Colonial |
| Model | 01 | | Residential |
| Grade | 28 | | Grade = 140% |
| Stories | 2 | | 2 Stories |
| Occupancy | 00 | | |
| Exterior Wall 1 | 11 | | Clapboard |
| 2 | 20 | | Brick/Masonry |
| Roof Structure | 05 | | Salt Box |
| Roof Cover | 11 | | Slate |
| Interior Wall 1 | 03 | | Plaster/SkimC |
| 2 | | | |
| Interior Floor 1 | 12 | | Hardwood |
| 2 | | | |
| Heating Fuel | 02 | | Oil |
| Heating Type | 04 | | Forced Air-Duc |
| AC Type | 01 | | None |
| Bedrooms | 06 | | 6 Bedrooms |
| Bathrooms | 3 | | 3 Bathrooms |
| Total Rooms | 10 | | 10 Rooms |
| Bath Type | 02 | | Modern |
| Kitchen Style | 02 | | Modern |

### Commercial Data Elements

| Element | Cd. | Ch. | Description |
|---|---|---|---|
| Heat & AC | | | |
| Frame Type | | | |
| Baths/Plumbing | | | |
| Ceiling/Wall | | | |
| Rooms/Prtns | | | |
| % Common Wall | | | |
| Wall Height | | | |

### CONDO/MOBILE HOME DATA

| Element | Code | Description | Factor |
|---|---|---|---|
| Complex | | | |
| Floor Adj | | | |
| Unit Location | | | |
| Number of Units | | | |
| Number of Levels | | | |
| % Ownership | | | |

### COST/MARKET VALUATION

| | |
|---|---|
| Unadj. Base Rate | 61.60 |
| Size Adj. Factor | 0.87117 |
| Grade (Q) Index | 1.57 |
| Adj. Base Rate | 84.25 |
| Bldg. Value New | 266,651 |
| Year Built | 1925 |
| Eff. Year Built | |
| Nrml Physcl Dep | 15 |
| Funcnl Obslnc | 0 |
| Econ Obslnc | 0 |
| Specl. Cond. Code | |
| Specl Cond % | |
| Overall % Cond. | 85 |
| Deprec. Bldg Value | 226,700 |

### MIXED USE

| Code | Description | Percentage |
|---|---|---|
| 1010 | SINGLE FAM | 100 |

## SKETCH

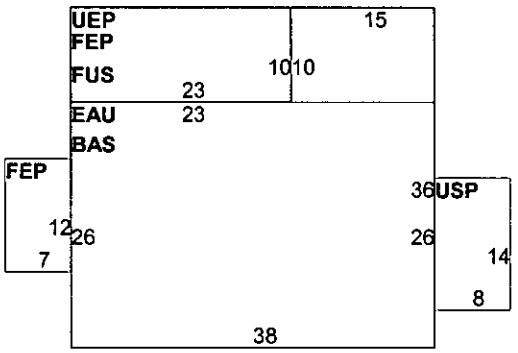

## OB-OUTBUILDING & YARD ITEMS(L) / XF-BUILDING EXTRA FEATURES(B)

| Code | Description | L/B | Units | Unit Price | Yr. | Dp Rt | %Cnd | Apr. Value |
|---|---|---|---|---|---|---|---|---|
| FPL3 | FIREPLACE 2 ST | B | 2 | 3,500.00 | 1991 | 1 | 100 | 6,400 |

## BUILDING SUB-AREA SUMMARY SECTION

| Code | Description | Living Area | Gross Area | Eff. Area | Unit Cost | Undeprec. Value |
|---|---|---|---|---|---|---|
| BAS | First Floor | 1,138 | 1,138 | 1,138 | 84.25 | 95,877 |
| EAU | Attic, Expansion, Unfinished | 0 | 988 | 99 | 8.44 | 8,341 |
| FBM | Basement, Finished | 0 | 550 | 193 | 29.56 | 16,260 |
| FEP | Porch, Enclosed, Finished | 0 | 314 | 220 | 59.03 | 18,535 |
| FUS | Upper Story, Finished | 1,231 | 1,368 | 1,231 | 75.81 | 103,712 |
| UBM | Basement, Unfinished | 0 | 308 | 62 | 16.96 | 5,224 |
| UEP | Porch, Enclosed, Unfinished | 0 | 230 | 104 | 38.10 | 8,762 |
| UGR | Garage, Unfinished | 0 | 280 | 84 | 25.28 | 7,077 |
| USP | Porch, Screen, Unfinished | 0 | 112 | 34 | 25.58 | 2,865 |

**Property Location:** 26 MT PLEASANT
**Vision ID:** 7161

**MAP ID:** 11A/ / 82/ /
**Other ID:** 11A000082

**Bldg #:** 1 **Card** 1 **of** 1 **Print Date:** 03/26/2003 09:06

| CURRENT OWNER | TOPO. | UTILITIES | STRT./ROAD | LOCATION |
|---|---|---|---|---|
| DUBACH, JOHN F & GILOTH, COPPER F | | 2 Public Wate | | |
| 26 MT PLEASANT | | 3 Public Sewe | | |
| AMHERST, MA 01002 | | | | |

**Additional Owners:**

**SUPPLEMENTAL DATA**

Account # 1253 PRECINCT

Owner Occupi

PHOTO

**GIS ID:** 11A-82

**CURRENT ASSESSMENT**

| Description | Code | Appraised Value | Assessed Value |
|---|---|---|---|
| RES LAND | 1010 | 95,900 | 95,900 |
| RESIDNTL | 1010 | 242,800 | 242,800 |
| | Total | 338,700 | 338,700 |

601
AMHERST, MA

# VISION

**RECORD OF OWNERSHIP**

| | BK-VOL/PAGE | SALE DATE | q/u | v/i | SALE PRICE | V.C. |
|---|---|---|---|---|---|---|
| DUBACH, JOHN F & GILOTH, COPPER F | 6140/ 173 | 03/08/2001 | Q | I | 350,000 | 00 |
| LINDSEY, CARRA N | 900/ 367 | 01/01/1981 | | | 0 | |

**PREVIOUS ASSESSMENTS (HISTORY)**

| Yr. | Code | Assessed Value | Yr. | Code | Assessed Value | Yr. | Code | Assessed Value |
|---|---|---|---|---|---|---|---|---|
| 2003 | 1010 | 95,900 | 2002 | 1010 | 73,900 | 2001 | 1010 | 73,900 |
| 2003 | 1010 | 242,800 | 2002 | 1010 | 233,100 | 2001 | 1010 | 188,200 |
| | Total: | 338,700 | | Total: | 307,000 | | Total: | 262,100 |

**EXEMPTIONS**

| Year | Type/Description | Amount |
|---|---|---|
| | | |
| | Total: | |

**OTHER ASSESSMENTS**

| Code | Description | Number | Amount | Comm. Int. |
|---|---|---|---|---|
| | | | | |

*This signature acknowledges a visit by a Data Collector or Assessor*

**NOTES**

**APPRAISED VALUE SUMMARY**

| | |
|---|---|
| Appraised Bldg. Value (Card) | 237,400 |
| Appraised XF (B) Value (Bldg) | 5,400 |
| Appraised OB (L) Value (Bldg) | 0 |
| Appraised Land Value (Bldg) | 95,900 |
| Special Land Value | |
| Total Appraised Card Value | 338,700 |
| Total Appraised Parcel Value | 338,700 |
| Valuation Method: | Cost/Market Valuation |
| Exemptions | 0 |
| **Net Total Appraised Parcel Value** | 338,700 |

**BUILDING PERMIT RECORD**

| Permit ID | Issue Date | Type | Description | Amount | Insp. Date | % Comp. | Date Comp. | Comments |
|---|---|---|---|---|---|---|---|---|
| 831263 | 9/30/1983 | | | 7,000 | | 0 | | |

**VISIT/CHANGE HISTORY**

| Date | ID | Cd. | Purpose/Result |
|---|---|---|---|
| 10/9/2001 | LT | 45 | Sales Reinspection c |
| 10/20/1990 | HG | | |

**LAND LINE VALUATION SECTION**

| B# | Use Code | Description | Zone | D | Frontage | Depth | Units | | Unit Price | I. Factor | S.I. | C. Factor | Nbhd. | Adj. | Notes- Adj/Special Pricing | Adj. Unit Price | Land Value |
|---|---|---|---|---|---|---|---|---|---|---|---|---|---|---|---|---|---|
| 1 | 1010 | SINGLE FAM | RG10 | | | | 12,000.00 | SF | 6.00 | 1.30 | 7 | 1.00 | CE | 1.00 | | 7.80 | 93,600 |
| 1 | 1010 | SINGLE FAM | RG11 | | | | 25,897.00 | SF | 0.07 | 1.30 | 0 | 1.00 | CE | 1.00 | | 0.09 | 2,300 |
| | | | | | | Total Card Land Units | 37,897.00 | SF | Parcel Total Land Area: | | | 37,897 SF | | | | Total Land Value | 95,900 |

**Property Location:** 26 MT PLEASANT
**Vision ID:** 7161

**MAP ID:** 11A/ / 82/ /
**Other ID:** 11A000082

**Bldg #:** 1 **Card** 1 **of** 1 **Print Date:** 03/26/2003 09

## CONSTRUCTION DETAIL

| Element | Cd. | Ch. | Description |
|---|---|---|---|
| Style/ Type | 52 | | Antique Coloni |
| Model | 01 | | Residential |
| Grade | 32 | | Grade = 160% |
| Stories | 2 | | 2 Stories |
| Occupancy | 00 | | |
| Exterior Wall 1 | 11 | | Clapboard |
| 2 | 20 | | Brick/Masonry |
| Roof Structure | 05 | | Salt Box |
| Roof Cover | 11 | | Slate |
| Interior Wall 1 | 03 | | Plaster/SkimC |
| 2 | | | |
| Interior Floor 1 | 12 | | Hardwood |
| 2 | | | |
| Heating Fuel | 02 | | Oil |
| Heating Type | 04 | | Forced Air-Duc |
| AC Type | 01 | | None |
| Bedrooms | 06 | | 6 Bedrooms |
| Bathrooms | 3 | | 3 Bathrooms |
| Total Rooms | 10 | | 10 Rooms |
| Bath Type | 02 | | Modern |
| Kitchen Style | 02 | | Modern |

### Commercial Data Elements

| Element | Cd. | Ch. | Description |
|---|---|---|---|
| Heat & AC | | | |
| Frame Type | | | |
| Baths/Plumbing | | | |
| Ceiling/Wall | | | |
| Rooms/Prtns | | | |
| % Common Wall | | | |
| Wall Height | | | |

### CONDO/MOBILE HOME DATA

| Element | Code | Description | Factor |
|---|---|---|---|
| Complex | | | |
| Floor Adj | | | |
| Unit Location | | | |
| Number of Units | | | |
| Number of Levels | | | |
| % Ownership | | | |

### COST/MARKET VALUATION

| | |
|---|---|
| Unadj. Base Rate | 70.00 |
| Size Adj. Factor | 0.89329 |
| Grade (Q) Index | 1.79 |
| Adj. Base Rate | 111.93 |
| Bldg. Value New | 354,258 |
| Year Built | 1925 |
| Eff. Year Built | (AV) |
| Nrml Physcl Dep | 33 |
| Funcnl Obslnc | 0 |
| Econ Obslnc | 0 |
| Specl. Cond. Code | |
| Specl Cond % | |
| Overall % Cond. | 67 |
| Deprec. Bldg Value | 237,400 |

### MIXED USE

| Code | Description | Percentage |
|---|---|---|
| 1010 | SINGLE FAM | 100 |

## SKETCH

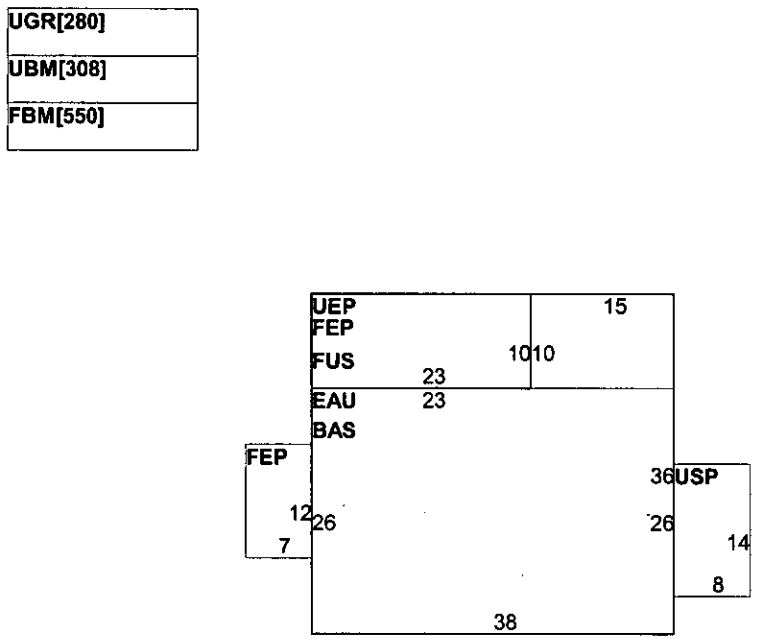


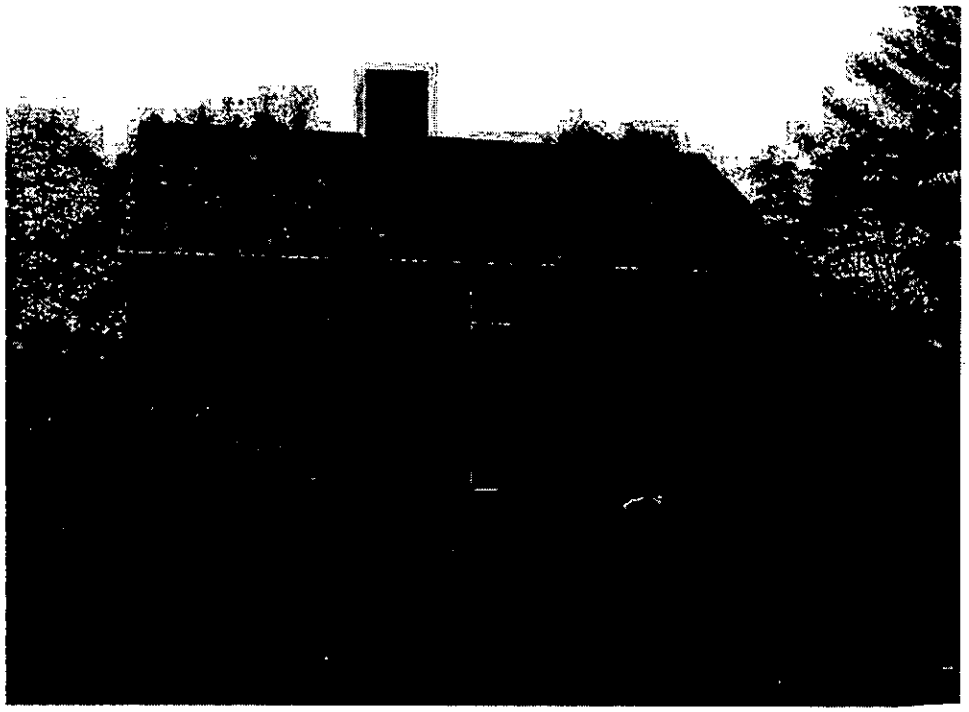

## OB-OUTBUILDING & YARD ITEMS(L) / XF-BUILDING EXTRA FEATURES(B)

| Code | Description | L/B | Units | Unit Price | Yr. | Dp Rt | %Cnd | Apr. Value |
|---|---|---|---|---|---|---|---|---|
| FPL3 | FIREPLACE 2 ST | B | 2 | 4,000.00 | 1969 | 1 | 100 | 5,400 |

## BUILDING SUB-AREA SUMMARY SECTION

| Code | Description | Living Area | Gross Area | Eff. Area | Unit Cost | Undeprec. Value |
|---|---|---|---|---|---|---|
| BAS | First Floor | 1,138 | 1,138 | 1,138 | 111.93 | 127,376 |
| EAU | Attic, Expansion, Unfinished | 0 | 988 | 99 | 11.22 | 11,081 |
| FBM | Basement, Finished | 0 | 550 | 193 | 39.28 | 21,602 |
| FEP | Porch, Enclosed, Finished | 0 | 314 | 220 | 78.42 | 24,625 |
| FUS | Upper Story, Finished | 1,231 | 1,368 | 1,231 | 100.72 | 137,786 |
| UBM | Basement, Unfinished | 0 | 308 | 62 | 22.53 | 6,940 |
| UEP | Porch, Enclosed, Unfinished | 0 | 230 | 104 | 50.61 | 11,641 |
| UGR | Garage, Unfinished | 0 | 280 | 84 | 33.58 | 9,402 |
| USP | Porch, Screen, Unfinished | 0 | 112 | 34 | 33.98 | 3,806 |
| Ttl. Gross Liv/Lease Area | | 2,369 | 5,288 | 3,165 | Bldg Val: | 354,258 |

MAP 11-A LOT 82 **PROPERTY ASSESSMENT RECORD – TOWN OF AMHERST, MASSACHUSETTS** S CARD NO. 1 of 2

26 Mt. Pleasant

LAND AREA 37,897SF

| RECORD OF OWNERSHIP | STAMPS | DATE | BOOK | PAGE |
|---|---|---|---|---|
| Lindsey, Carra N. | docket #50954- | 1981 | 900 | 367 |

**ASSESSMENT RECORD**

| | 1987 | 1988 | 19 | 19 | 19 | 19 | 19 | 19 | 19 | 19 |
|---|---|---|---|---|---|---|---|---|---|---|
| DWELLING | | | | | | | | | | |
| GARAGE | | | | | | | | | | |
| TOTAL VALUE BUILDINGS | 168300 | 168300 | | | | | | | | |
| TOTAL VALUE LAND | 57000 | 65700 | | | | | | | | |
| TOTAL VALUE LAND & BUILDINGS | 225300 | 234000 | | | | | | | | |

**PROPERTY FACTORS**

| TOPOGRAPHY | | IMPROVEMENTS | |
|---|---|---|---|
| LEVEL | | WATER | |
| HIGH | | SEWER | |
| LOW | | GAS | |
| ROLLING | | ELECTRICITY | |
| SWAMPY | | ALL UTILITIES | |
| **STREET** | | **TREND OF DISTRICT** | |
| PAVED | | IMPROVING | |
| SEMI-IMPROVED | | STATIC | |
| DIRT | | DECLINING | |
| SIDEWALK | | | |

**PROPERTY INFORMATION**

| | | |
|---|---|---|
| LAND COST | | |
| BLDG. COST | | |
| SALE PRICE | | |
| RENT | | |
| EXPENSE | | |
| NET RENT | | |
| LAND | @ | % = |
| BLDG. | @ | % = |
| TOTAL | | |

**MEMORANDA**

| BUILDING PERMIT RECORD | EST. COST | PERMIT NO. | DATE |
|---|---|---|---|
| | | | |

**LAND VALUE COMPUTATIONS AND SUMMARY**

| FRONTAGE | DEPTH | UNIT PRICE | DEPTH FACTOR | FRONT FT. PRICE | | | |
|---|---|---|---|---|---|---|---|
| C.I. | | | | | | | |
| TOTAL VALUE LAND | | | | | | | |
| TOTAL VALUE BUILDINGS | | | | | | | |
| TOTAL VALUE LAND & BUILDINGS | | | | | | | |
| FRONTAGE | DEPTH | UNIT PRICE | DEPTH FACTOR | FRONT FT. PRICE | | | |
| C.I. | | | | | | | |
| TOTAL VALUE LAND | | | | | | | |
| TOTAL VALUE BUILDINGS | | | | | | | |
| TOTAL VALUE LAND & BUILDINGS | | | | | | | |

# BUILDING RECORD

## OCCUPANCY

| | | | |
|---|---|---|---|
| SINGLE FAMILY | | HOTEL | |
| TWO FAMILY | | ROOMING HOUSE | |
| APARTMENTS | | GAS STATION | |
| STORES | | WAREHOUSE | |
| OFFICES | | INDUSTRIAL | |
| COMM. GARAGE | | FARM | |

## NOTES – SPECIAL EQUIPMENT

## SKETCH

## CONSTRUCTION

### FOUNDATION

| | |
|---|---|
| CONCRETE | |
| CONCRETE BLOCK | |
| BRICK OR STONE | |
| PIERS | |

### BASEMENT

| | |
|---|---|
| AREA FULL | |
| ¼ ½ ¾ | |
| NO BASEMENT | |
| HEAD ROOM | |

### WALLS

| | |
|---|---|
| BEVEL SIDING | |
| WIDE SIDING | |
| DROP SIDING | |
| WOOD SHINGLES | |
| ASPHALT SHINGLES | |
| ASBESTOS SHINGLES | |
| STUCCO ON FRAME | |
| STUCCO ON MASONRY | |
| BRICK VENEER | |
| BRICK ON MASONRY | |
| CONC. OR CIND. BLOCK | |
| ARTIFICIAL STONE | |
| STONE ON MASONRY | |

### ROOFING

| | |
|---|---|
| ASPHALT SHINGLES | |
| WOOD SHINGLES | |
| ASBESTOS SHINGLES | |
| SLATE | |
| TILE | |
| METAL | |
| COMPOSITION | |
| ROLL ROOFING | |

### FRAMING

| | |
|---|---|
| WOOD JOIST | |
| TIMBER, BEAMS & COLS | |
| STEEL BEAMS & COLS | |
| WOOD RAFTERS | |

### NO. OF ROOMS

| | |
|---|---|
| BSMT. | 2ND |
| 1ST | 3RD |

### FLOORS

| | B | 1 | 2 | 3 |
|---|---|---|---|---|
| CEMENT | | | | |
| EARTH | | | | |
| PINE | | | | |
| HARDWOOD | | | | |
| ASPH. TILE | | | | |

| | |
|---|---|
| ATTIC STRS. & FLOOR | |

### INTERIOR FINISH

| | B | 1 | 2 | 3 |
|---|---|---|---|---|
| PINE | | | | |
| HARDWOOD | | | | |
| PLASTER | | | | |
| DRY WALL | | | | |
| UNFINISHED | | | | |

| | |
|---|---|
| FIN. BSMT. AREA | |
| FIN. ATTIC AREA | |
| FIREPLACE | |
| MODERN KITCHEN | |

### HEATING

| | |
|---|---|
| PIPELESS FURNACE | |
| HOT AIR FURNACE | |
| FORCED AIR FURNACE | |
| STEAM | |
| HOT WATER OR VAPOR | |
| AIR CONDITIONING | |
| RADIANT HEATING | |
| UNIT HEATERS | |
| AUTO BURNER | |
| NO HEATING | |

### PLUMBING

| | |
|---|---|
| BATHROOM | |
| TOILET ROOM | |
| WATER CLOSET | |
| LAVATORY | |
| KITCHEN SINK | |
| STD. WATER HEATER | |
| AUTO. WATER HEATER | |
| NO PLUMBING | |
| MODERN FIXTURES | |
| TILE BATH FLR. & WSCT. | |
| TILE TOILET FLR. & WSCT. | |

### LIGHTING

| | |
|---|---|
| NO LIGHTING | |

## DESIGN

| | |
|---|---|
| RANCH TYPE | |
| SPLIT LEVEL | |
| CONVENTIONAL | |
| DESIGN FACTOR | % |
| GRADE FACTOR | % |

## COMPUTATIONS

| | UNIT | AMOUNT | |
|---|---|---|---|
| | S.F. | | |
| ADD. & PCHS. | | | |
| WALL HT. | | | |
| BSMT. AREA | | | |
| FINISH | | | |
| ATTIC | | | |
| HEATING | | | |
| PLUMBING | | | |
| M.F. | | | |
| TOTAL | | | |
| FACTOR | | | |
| REPL. VALUE | | | |

## DESCRIPTION OF OBSOLESCENCE

| | | | | | |
|---|---|---|---|---|---|
| STRUCTURAL | | ECONOMIC | | BLIGHTED AREA | |
| SURPLUS CAPACITY | | TOPOGRAPHY | | RURAL LOCATION | |
| OVERBUILT | | COMMER. LOCATION | | WATER SUPPLY | |

## SUMMARY OF BUILDINGS

| OCCUPANCY | TYPE | GRADE | AGE | REMOD. | COND. | REPL. VAL. | PHYS. DEPR. | PHYS. VAL. | OBSOL. DEPR. | SOUND VAL. |
|---|---|---|---|---|---|---|---|---|---|---|
| DWELLING | | | | | | | | | | |
| GARAGE | | | | | | | | | | |
| | | | | | | | | | | |
| | | | | | | | | | | |
| COMMERCIAL | | | | | | | | | | |
| | | | | | | | | | | |
| | | | | | | | | | | |
| | | | | | | | | | | |

| DATE LISTED | LISTED | MEAS. | AREA | PRICED | REVD. | CHECKED | TOTAL VALUE BUILDINGS | |
|---|---|---|---|---|---|---|---|---|
| | | | | | | | | |

GRADE DENOTES QUALITY OF CONSTRUCTION: A–EXCELLENT; B–GOOD; C–AVERAGE; D–CHEAP; E–SUBSTANDARD

MAP 11-A LOT 82 **PROPERTY ASSESSMENT RECORD – TOWN OF AMHERST, MASSACHUSETTS** S CARD NO.

26 Mt Pleasant

1976 – .872 A

~~1.04~~ A 37,897 s.f.

(45,302 s.f.) LAND AREA ~~1A 7 rds~~

| RECORD OF OWNERSHIP | STAMPS | DATE | BOOK | PAGE |
|---|---|---|---|---|
| Lindsey, (Adrian H.) 1981 & Carra N.* | | | 900 | 367 |

**ASSESSMENT RECORD**

| | 1963 | 1964 | 1970 | 1977 | 1978 | 1978 ✓ | 1980 | 1981 | 1982 | 1983 |
|---|---|---|---|---|---|---|---|---|---|---|
| DWELLING – garage | 8000 | | | | | | | | | |
| GARAGE 3-10-77 | | | | | | Adjusted | | | | Adjusted |
| TOTAL VALUE BUILDINGS | 8000 | 28240 | 43800 | 43800 | 75300 | 66400 | 73900 | 78500 | 92900 | 86900 |
| TOTAL VALUE LAND | 2000 | 4790 | 11560 | 10990 | 10500 | 10500 | 10500 | 17500 | 17500 | 17500 |
| TOTAL VALUE LAND & BUILDINGS | 10000 | 33030 | 55360 | 54790 | 85800 | 76,900 | 83700 | 96000 | 110400 | 104400 |

**PROPERTY FACTORS**

| TOPOGRAPHY | IMPROVEMENTS |
|---|---|
| | WATER |

1984

Total Value Bldgs. 106800
Total Value Land 20900
Total Value 127700

1985

Total Value Bldgs. 119100
Total Value Land 20900
Total Value 140000

1986

Total Value Bldgs. 131500
Total Value Land 26300
Total Value 157800

LAND @ % =
BLDG. @ % =
TOTAL

**MEMORANDA**

7,325 s.f. or .168A to 1-A-5
* For Title – Ref to Probate Box # 1138, File # 26 Docket # 50954. – 1981

Chg. made

| BUILDING PERMIT RECORD | EST. COST | PERMIT NO. | DATE |
|---|---|---|---|
| CONSTRUCT A SUN ROOM | 7000. | 83-263 | 9/83 |

**LAND VALUE COMPUTATIONS AND SUMMARY**

| FRONTAGE | DEPTH | UNIT PRICE | DEPTH FACTOR | FRONT FT. PRICE | | |
|---|---|---|---|---|---|---|
| 190 | 200A. | 38– | 111% | 42– | 7980 | |
| EFF – 40% x 7980 | | | | | -3190 | |
| C.I. | | | | | | |
| TOTAL VALUE LAND | | | | | 4790 | |
| TOTAL VALUE BUILDINGS | | | | | 28240 | |
| TOTAL VALUE LAND & BUILDINGS | | | | | 33030 | |
| FRONTAGE | DEPTH | UNIT PRICE | DEPTH FACTOR | FRONT FT. PRICE | | 77 |
| 12,000 | | .70 | | | 8400 | 8400 |
| 31,560 | | .10 | | | 3160 | |
| 25897 | | .10 | | | | 2590 |
| C.I. | | | | | | |
| TOTAL VALUE LAND | | | | | 11560 | 10990 |
| TOTAL VALUE BUILDINGS | | | | | 43800 | 43800 |
| TOTAL VALUE LAND & BUILDINGS | | | | | 55360 | 54790 |

IN FLA. FOR WINTER

# BUILDING RECORD

## OCCUPANCY

| | | | |
|---|---|---|---|
| SINGLE FAMILY | ✓ | HOTEL | |
| TWO FAMILY | | ROOMING HOUSE | |
| APARTMENTS | | GAS STATION | |
| STORES | | WAREHOUSE | |
| OFFICES | | INDUSTRIAL | |
| COMM. GARAGE | | FARM | |

## CONSTRUCTION

### FOUNDATION

| | |
|---|---|
| CONCRETE | ✓ |
| CONCRETE BLOCK | |
| BRICK OR STONE | |
| PIERS | |

### BASEMENT

| | |
|---|---|
| AREA FULL | ✓ |
| ¼ ½ ¾ | |
| NO BASEMENT | |
| HEAD ROOM | ✓ |

### WALLS

| | |
|---|---|
| BEVEL SIDING | ✓ |
| WIDE SIDING | |
| DROP SIDING | |
| WOOD SHINGLES | |
| ASPHALT SHINGLES | |
| ASBESTOS SHINGLES | |
| STUCCO ON FRAME | |
| STUCCO ON MASONRY | |
| BRICK VENEER | ✓ |
| BRICK ON MASONRY | |
| CONC. OR CIND. BLOCK | |
| ARTIFICIAL STONE | |
| STONE ON MASONRY | |

### ROOFING

| | |
|---|---|
| ASPHALT SHINGLES | |
| WOOD SHINGLES | |
| ASBESTOS SHINGLES | |
| SLATE | ✓ |
| TILE | |
| METAL | |
| COMPOSITION | |
| ROLL ROOFING | |

### FRAMING

| | |
|---|---|
| WOOD JOIST | ✓ |
| TIMBER, BEAMS & COLS | |
| STEEL BEAMS & COLS | |
| WOOD RAFTERS | |

### NO. OF ROOMS

| | |
|---|---|
| BSMT. | 2ND |
| 1ST | 3RD |

### FLOORS

| | B | 1 | 2 | 3 |
|---|---|---|---|---|
| CEMENT | ✓ | | | |
| EARTH | | | | |
| PINE | | | | |
| HARDWOOD | | ✓ | ✓ | |
| ASPH. TILE | ✓ | | | |

| | |
|---|---|
| ATTIC STRS. & FLOOR | ✓ |

### INTERIOR FINISH

| | B | 1 | 2 | 3 |
|---|---|---|---|---|
| PINE | ✓ | ✓ | ✓ | |
| HARDWOOD | | | | |
| PLASTER | ✓ | ✓ | ✓ | |
| DRY WALL | | | | |
| UNFINISHED | | | | |

| | |
|---|---|
| FIN. BSMT. AREA 550 | ✓ |
| FIN. ATTIC AREA | |
| FIREPLACE | 2 |
| MODERN KITCHEN | ✓ |

### HEATING

| | |
|---|---|
| PIPELESS FURNACE | |
| HOT AIR FURNACE | |
| FORCED AIR FURNACE | ✓ |
| STEAM | |
| HOT WATER OR VAPOR | |
| AIR CONDITIONING | |
| RADIANT HEATING | |
| UNIT HEATERS | |
| AUTO BURNER | ✓ |
| NO HEATING | |

### PLUMBING

| | | |
|---|---|---|
| BATHROOM | | ✓ |
| TOILET ROOM | 2 | ✓ |
| WATER CLOSET | | ✓ |
| LAVATORY | | |
| KITCHEN SINK | 2 | ✓ |
| STD. WATER HEATER | | |
| AUTO. WATER HEATER | | |
| NO PLUMBING | | |
| MODERN FIXTURES | | ✓ |
| TILE BATH FLR. & WSCT. | | |
| TILE TOILET FLR. & WSCT. | | |

### LIGHTING

| |
|---|
| NO LIGHTING |

## NOTES – SPECIAL EQUIPMENT

CALLFA [illegible]
[illegible] - LF

## DESIGN

| | |
|---|---|
| GARRISON | ✓ |
| RANCH TYPE | |
| SPLIT LEVEL | |
| CONVENTIONAL | |
| DESIGN FACTOR | % |
| GRADE FACTOR | -10 % |

## COMPUTATIONS

| UNIT | AMOUNT |
|---|---|
| 1138 S.F. | 24400 |
| ADD. & PCHS. | + 15000 |
| WALL HT. | |
| BSMT. AREA | |
| FINISH 3½ | + 11920. |
| ATTIC | + 660 |
| HEATING | |
| PLUMBING | + 1200 |
| O. F. | |
| TOTAL | 33180. |
| FACTOR 1.0 | x 1.65 |
| REPL. VALUE | 54750 |

## SKETCH

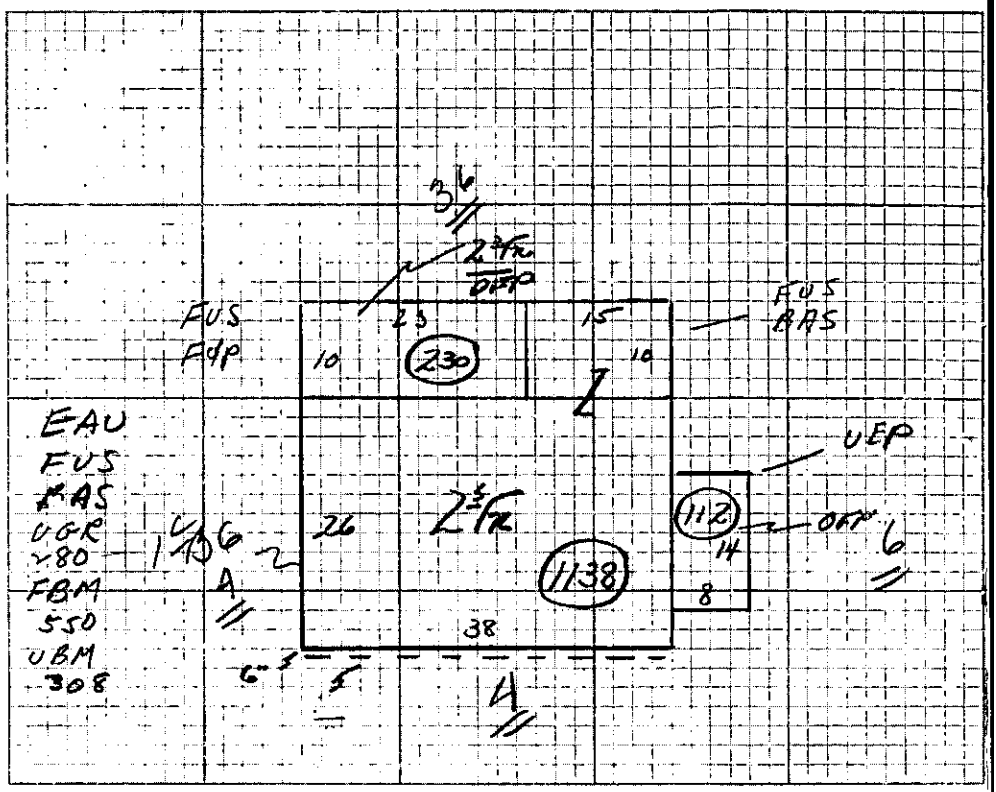


## DESCRIPTION OF OBSOLESCENCE

| | | | | | |
|---|---|---|---|---|---|
| STRUCTURAL | | ECONOMIC | | BLIGHTED AREA | |
| SURPLUS CAPACITY | | TOPOGRAPHY | | RURAL LOCATION | |
| OVERBUILT | | COMMER. LOCATION | | WATER SUPPLY | |

## SUMMARY OF BUILDINGS

| OCCUPANCY | TYPE | GRADE | AGE | REMOD. | COND. | REPL. VAL. | PHYS. DEPR. | PHYS. VAL. | OBSOL. DEPR. | SOUND VAL. |
|---|---|---|---|---|---|---|---|---|---|---|
| DWELLING | 2 Fr. | A+10 | | | G | 54750 | 20% | | — | 43800 |
| GARAGE | 1 Bmt | | | | | | | | | |
| COMMERCIAL | | | | | | | | | | |

| DATE LISTED | LISTED | MEAS. | AREA | PRICED | REVD. | CHECKED | TOTAL VALUE BUILDINGS | 43800 |
|---|---|---|---|---|---|---|---|---|
| 12-1[illegible]-6[illegible] | [illegible] | [illegible] | [illegible] | [illegible] | | [illegible] | | |

GRADE DENOTES QUALITY OF CONSTRUCTION: A–EXCELLENT; B–GOOD; C–AVERAGE; D–CHEAP; E–SUBSTANDARD

AMHERST, MA

11A/000/082

| ACCOUNT | CURRENT OWNER | PARCEL NO | PARCEL ADDRESS/DESCRIPTION | DATE | CARD |
|---|---|---|---|---|---|
| 1253 | LINDSEY, CARRA N. | 11A-000-082 | 26 MT PLEASANT | 01/20/94 | 1 OF 1 |

| ACCOUNT | TAX OWNER | ACRES: .87 | | CITY: | LAST APPRAISED |
|---|---|---|---|---|---|
| 1253 | LINDSEY, CARRA N. | LOTS: 0 | EXEMPT: N | NBRHD: CE | BY HG ON 10/20/90 |
| | | DEED BP: 900/367 | | PLAT BP: | |

SALE INFORMATION: DATE: ** PRICE/STAMPS NOT AVAILABLE **

VALUE SUMMARY

| | LAND MKT | LAND USE | BUILDING | OUTBLDG | TOTAL MKT | TOTAL USE |
|---|---|---|---|---|---|---|
| MULTIPLE USE | $0 | $0 | $0 | $0 | $0 | $0 |
| RESIDENTIAL | $83,500 | $83,500 | $174,800 | $0 | $258,300 | $258,300 |
| OPEN SPACE | $0 | $0 | $0 | $0 | $0 | $0 |
| COMMERCIAL | $0 | $0 | $0 | $0 | $0 | $0 |
| INDUSTRIAL | $0 | $0 | $0 | $0 | $0 | $0 |
| PERSONAL | $0 | $0 | $0 | $0 | $0 | $0 |
| FOREST | $0 | $0 | $0 | $0 | $0 | $0 |
| AG/HORT | $0 | $0 | $0 | $0 | $0 | $0 |
| RECREATIONAL | $0 | $0 | $0 | $0 | $0 | $0 |
| EXEMPT | $0 | $0 | $0 | $0 | $0 | $0 |
| | | | | | MKT VALUE | TAX VALUE |
| *** TOTAL *** | $83,500 | $83,500 | $174,800 | $0 | $258,300 | $258,300 |

GENERAL REMARKS: FULL DORMER REAR SUN ROOM ADDED 1983

LAND

| NO | TYPE | DESCRIPTION | ZONE | FRONTAGE | NO UNITS | TYP | UNIT PRICE | COND | ADJ PCT | TOT PCT | ADJ UN PRICE | MKT VALUE | USE VALUE |
|---|---|---|---|---|---|---|---|---|---|---|---|---|---|
| 1 | 101 | LAND 1 FAMILY | RG10 | | 12000.00 | SF | 5.20 | 100 | 115 | 115 | 5.98 | 63,100 | |
| 2 | 101 | LAND 1 FAMILY | RG11 | | 25897.00 | SF | 0.78 | 100 | 115 | 115 | 0.90 | 20,400 | |

OUTBUILDINGS & EXTRA FEATURES

| NO | TYPE | DESCRIPTION | AREA | U PRICE | RCN | PHYS | VALUE |
|---|---|---|---|---|---|---|---|

| ACCOUNT | CURRENT OWNER | PARCEL NO | PARCEL ADDRESS/DESCRIPTION | DATE | 11A/000/082 CARD |
|---|---|---|---|---|---|
| 1253 | LINDSEY, CARRA N. | 11A-000-082 | 26 MT PLEASANT | 01/20/94 | 2 OF 1 |

| MODEL | BULDING STYLE | BUILDING USE | BASE EC FN PH PCT | RCN | DEPR VALUE |
|---|---|---|---|---|---|
| SFR | 03-COLONIAL | 101-DWG 1 FAMILY | 00.00 20 100 | 213,383 | 174,800 |

SCALE IS 1:11

## - - - - - - CONSTRUCTION DETAIL - - - - - - -

| COMPONENT | TYPE |
|---|---|
| FOUNDATION..... | CONCRETE |
| SUB FLOOR..... | |
| EXTERIOR WALL..... | CLAPBOARD |
| INTERIOR WALL..... | PLASTER |
| ROOF STRUCTURE.... | SALT BOX |
| ROOF COVER..... | SLATE |
| HEATING FUEL/TYPE. | OIL FHA DUCTED |
| STRUCTURAL FRAME.. | WOOD |
| FLOOR COVER 1..... | HARDWOOD |
| FLOOR COVER 2..... | |
| CEILING/INSUL..... | |

| | ---BAS--- | ---FUS--- | --OTHER-- |
|---|---|---|---|
| BEDROOMS | 6 | 0 | 0 |
| FULL BATHS | 2 | 0 | 0 |
| HALF BATHS | 2 | 0 | 0 |
| EXTRA FIXTURES | 0 | 0 | 0 |

| | |
|---|---|
| YEAR BUILT..... | 1925 |
| NUMBER STORIES.... | 2.0 |
| PERIMETER MULT.... | 104 |
| QUALITY..... | AVERAGE |
| SHAPE/DESIGN..... | 140 |
| WALL HEIGHT..... | 8.0 |
| EFFECT BASE RATE.. | 70.40 |

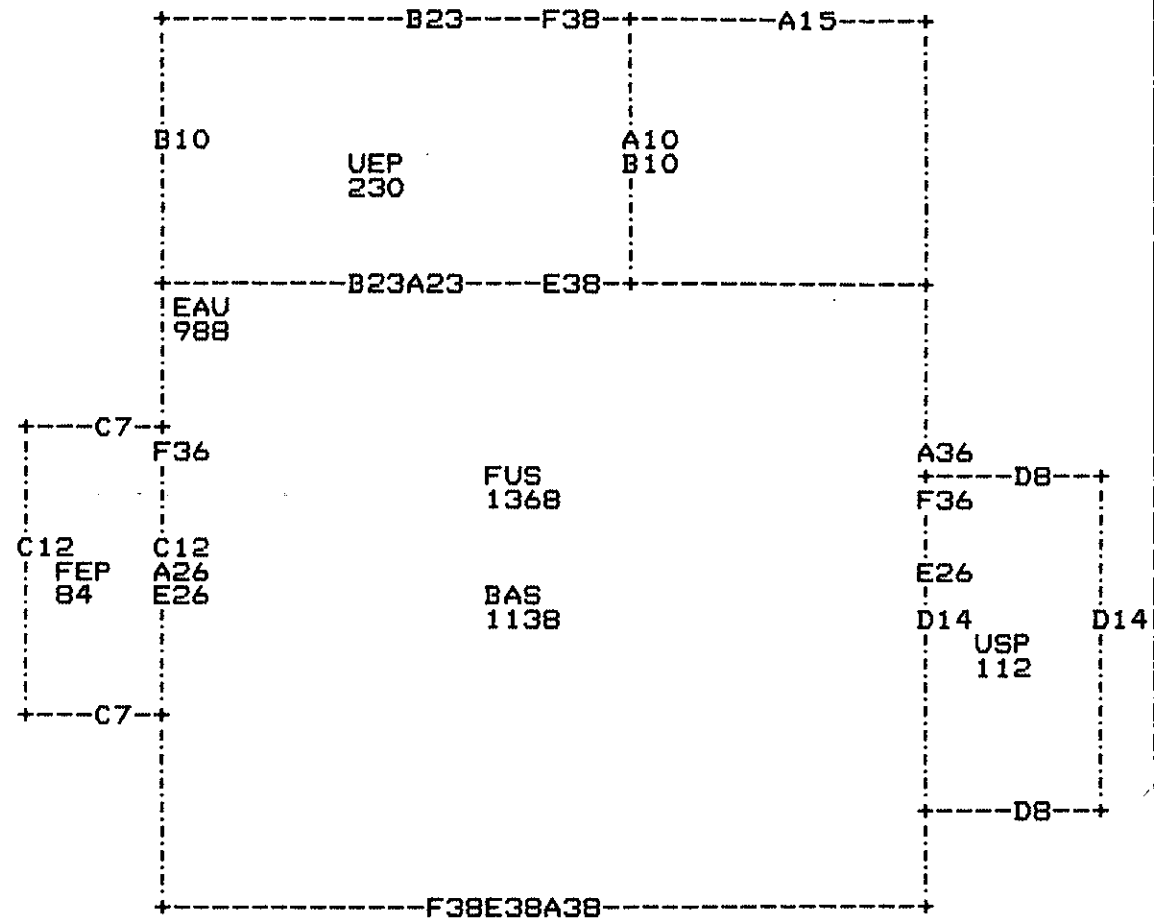


| SEC | TYPE | GROSS | PCT | EFFECT | RPL COST |
|---|---|---|---|---|---|
| A | BAS | 1138 | 100 | 1138 | 80,115 |
| B | UEP | 230 | 45 | 104 | 7,322 |
| C | FEP | 84 | 70 | 59 | 4,154 |
| D | USP | 112 | 30 | 34 | 2,394 |
| E | EAU | 988 | 10 | 99 | 6,970 |
| F | FUS | 1368 | 90 | 1231 | 86,662 |
| G | UGR | 280 | 30 | 84 | 5,914 |
| H | FBM | 550 | 35 | 193 | 13,587 |
| I | UBM | 308 | 20 | 62 | 4,365 |
| SUBTL | | 5058 | | 3004 | 211,483 |
| FIREPLACE | | 2 FLUES, | | 2 OPENS | 1,900 |
| GRAND TOTAL | | | | | 213,383 |

BUILDING DIMENSIONS - - - - - - - - - - - - - - - - - - - - -

DL15/DD10/DL23/DD26/DR38/DU36/
ML15/DL23/DD10/DR23/DU10/
ML15/MD10/ML23/MD6/DL7/DD12/DR7/DU12/
MD18/DR8/DD14/DL8/DU14/
MD10/DL38/DD26/DR38/DU26/
DL38/DD36/DR38/DU36/

Property Location: 26 MT PLEASANT | MAP ID: 11A/ / 82/ / | Bldg Name: | State Use: 1010
Vision ID: 7161 | Account # 1253 | Bldg #: 1 of 1 | Sec #: 1 of 1 | Card 1 of 1 | Print Date: 12/13/2006 11:00

| CURRENT OWNER | TOPO. | UTILITIES | STRT./ROAD | LOCATION |
|---|---|---|---|---|
| DUBACH, JOHN F & GILOTH, COPPI | | 2 Public Water | | |
| 26 MT PLEASANT | | 3 Public Sewer | | |
| AMHERST, MA 01002 | | | | |

Additional Owners:

**SUPPLEMENTAL DATA**

| | | | |
|---|---|---|---|
| Other ID: | 11A000082 | Precinct | |
| Calc Frontag | 20 | Units | |
| Owner Occupi | YES | | |
| APR PARCELS | | | |
| GIS ID: 11A-82 | | ASSOC PID# | |

**CURRENT ASSESSMENT**

| Description | Code | Appraised Value | Assessed Value |
|---|---|---|---|
| RESIDNTL | 1010 | 388,400 | 388,400 |
| RES LAND | 1010 | 155,300 | 155,300 |
| Total | | 543,700 | 543,700 |

601
AMHERST, MA

VISION

**RECORD OF OWNERSHIP**

| | BK-VOL/PAGE | SALE DATE | q/u | v/i | SALE PRICE | V.C. |
|---|---|---|---|---|---|---|
| DUBACH, JOHN F & GILOTH, COPPER F | 6140/ 173 | 03/08/2001 | Q | I | 350,000 | 00 |
| LINDSEY, CARRA N | 900/ 367 | 01/01/1981 | | | 0 | |

**PREVIOUS ASSESSMENTS (HISTORY)**

| Yr. | Code | Assessed Value | Yr. | Code | Assessed Value | Yr. | Code | Assessed Value |
|---|---|---|---|---|---|---|---|---|
| 2007 | 1010 | 388,400 | 2006 | 1010 | 388,400 | 2005 | 1010 | 327,500 |
| 2007 | 1010 | 155,300 | 2006 | 1010 | 155,300 | 2005 | 1010 | 123,000 |
| | Total: | 543,700 | | Total: | 543,700 | | Total: | 450,500 |

**EXEMPTIONS**

| Year | Type | Description | Amount |
|---|---|---|---|
| | | Total: | |

**OTHER ASSESSMENTS**

| Code | Description | Number | Amount | Comm. Int. |
|---|---|---|---|---|
| | | | | |

*This signature acknowledges a visit by a Data Collector or Assessor*

**APPRAISED VALUE SUMMARY**

| | |
|---|---|
| Appraised Bldg. Value (Card) | 383,000 |
| Appraised XF (B) Value (Bldg) | 5,400 |
| Appraised OB (L) Value (Bldg) | 0 |
| Appraised Land Value (Bldg) | 155,300 |
| Special Land Value | 0 |
| Total Appraised Parcel Value | 543,700 |
| Valuation Method: | C |
| Adjustment: | 0 |
| **Net Total Appraised Parcel Value** | **543,700** |

**ASSESSING NEIGHBORHOOD**

| NBHD/ SUB | NBHD NAME | STREET INDEX NAME | TRACING | BATCH |
|---|---|---|---|---|
| CE/A | | | | |

**NOTES**

**BUILDING PERMIT RECORD**

| Permit ID | Issue Date | Type | Description | Amount | Insp. Date | % Comp. | Date Comp. | Comments |
|---|---|---|---|---|---|---|---|---|
| 831263 | 09/30/1983 | | | 7,000 | | 0 | | |

**VISIT/ CHANGE HISTORY**

| Date | Type | IS | ID | Cd. | Purpose/Result |
|---|---|---|---|---|---|
| 10/20/2005 | | | SS | 15 | DRIVE BY FIELD REVI |
| 10/9/2001 | | | LT | 45 | Sales Reinspection c |
| 10/20/1990 | | | HG | | |

**LAND LINE VALUATION SECTION**

| B # | Use Code | Use Description | Zone | D | Frontage | Depth | Units | | Unit Price | I. Factor | S.A. | Acre Disc | C. Factor | ST. Idx | Adj. | Notes- Adj | Special Pricing | Adj. Unit Price | Land Value |
|---|---|---|---|---|---|---|---|---|---|---|---|---|---|---|---|---|---|---|---|
| 1 | 1010 | SINGLE FAM MDL-01 | RG10 | | | | 12,000 | SF | 8.88 | 1.25 | 7 | 1.0000 | 1.00 | CE | 1.15 | | | 12.77 | 153,200 |
| 1 | 1010 | SINGLE FAM MDL-01 | RG11 | | | | 25,897 | SF | 0.07 | 1.00 | 0 | 1.0000 | 1.00 | CE | 1.15 | | | 0.08 | 2,100 |

Total Card Land Units: 0.87 AC | Parcel Total Land Area: 0.87 AC | Total Land Value: 155,300

**Property Location:** 26 MT PLEASANT **MAP ID:** 11A/ / 82/ / **Bldg Name:** **State Use:** 1010

**Vision ID:** 7161 **Account #**1253 **Bldg #:** 1 of 1 **Sec #:** 1 of 1 **Card** 1 of 1 **Print Date:** 12/13/2006 11:00

## CONSTRUCTION DETAIL

| Element | Cd. | Ch. | Description |
|---|---|---|---|
| Style | 52 | | Antique Coloni |
| Model | 01 | | Residential |
| Grade | 30 | | Grade = 150% |
| Stories | 2 | | 2 Stories |
| Occupancy | | | |
| Exterior Wall 1 | 11 | | Clapboard |
| Exterior Wall 2 | 20 | | Brick/Masonry |
| Roof Structure | 05 | | Salt Box |
| Roof Cover | 11 | | Slate |
| Interior Wall 1 | 03 | | Plaster/SkimC |
| Interior Wall 2 | | | |
| Interior Flr 1 | 12 | | Hardwood |
| Interior Flr 2 | | | |
| Heat Fuel | 02 | | Oil |
| Heat Type | 04 | | Forced Air-Duc |
| AC Type | 01 | | None |
| Total Bedrooms | 06 | | 6 Bedrooms |
| Total Bthrms | 3 | | |
| Total Half Baths | 0 | | |
| Total Xtra Fixtrs | | | |
| Total Rooms | 10 | | 10 Rooms |
| Bath Style | 02 | | Average |
| Kitchen Style | 02 | | Modern |

## CONSTRUCTION DETAIL (CONTINUED)

| Element | Cd. | Ch. | Description |
|---|---|---|---|
| Foundation | | | |

## MIXED USE

| Code | Description | Percentage |
|---|---|---|
| 1010 | SINGLE FAM MDL-01 | 100 |

## COST/MARKET VALUATION

| | |
|---|---|
| Adj. Base Rate: | 180.63 |
| Section. RCN: | 571,694 |
| Net Other Adj: | 0.00 |
| Replace Cost | 571,694 |
| AYB | 1925 |
| Dep Code | AV |
| Remodel Rating | |
| Year Remodeled | |
| Dep % | 33 |
| Functional Obslnc | 0 |
| External Obslnc | 0 |
| Cost Trend Factor | 1 |
| Condition | |
| % Complete | |
| Overall % Cond | 67 |
| Apprais Val | 383,000 |
| Dep % Ovr | 0 |
| Dep Ovr Comment | |
| Misc Imp Ovr | 0 |
| Misc Imp Ovr Comment | |
| Cost to Cure Ovr | 0 |
| Cost to Cure Ovr Comment | |

UGR[280]

UBM[308]

FBM[550]

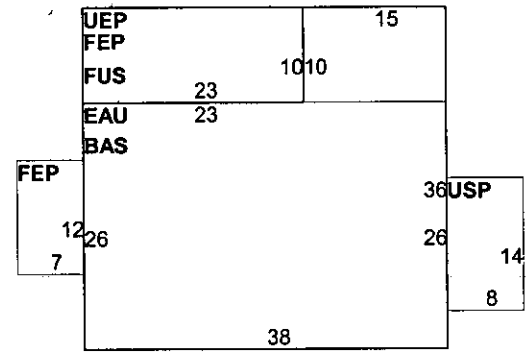


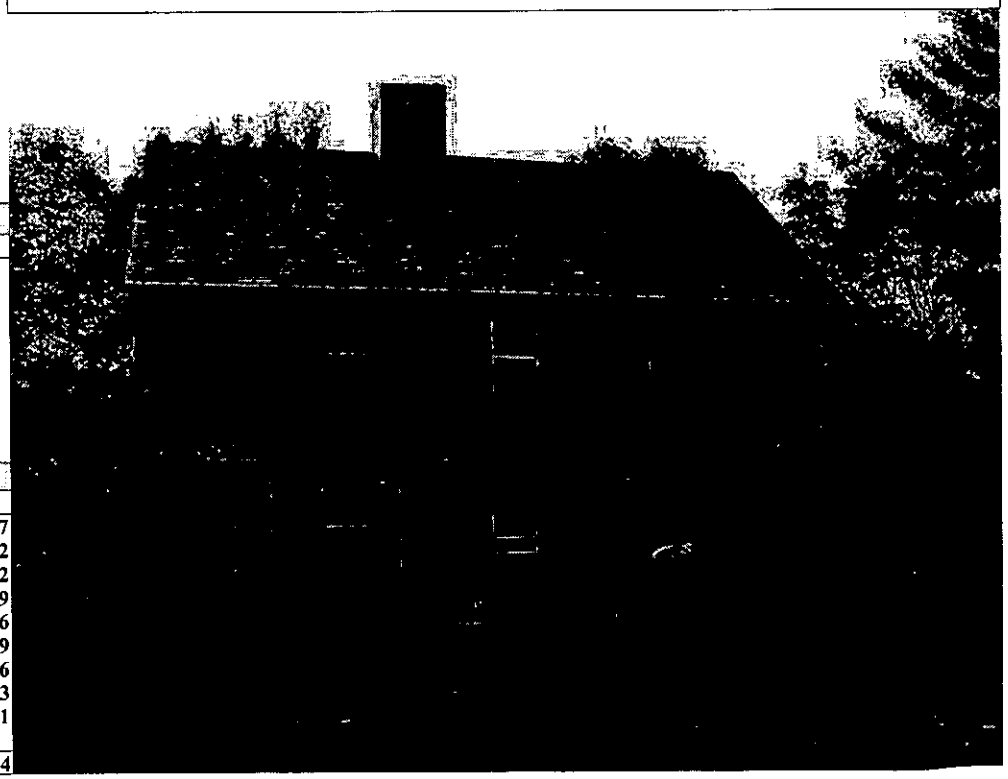

## OB-OUTBUILDING & YARD ITEMS(L) / XF-BUILDING EXTRA FEATURES(B)

| Code | Description | Sub | Sub Descript | L/B | Units | Unit Price | Yr | Gde | Dp Rt | Cnd | %Cnd | Apr Value |
|---|---|---|---|---|---|---|---|---|---|---|---|---|
| FPL3 | FIREPLACE 2 | | | B | 2 | 4,000.00 | 1972 | | 1 | | 100 | 5,400 |

## BUILDING SUB-AREA SUMMARY SECTION

| Code | Description | Living Area | Gross Area | Eff. Area | Unit Cost | Undeprec. Value |
|---|---|---|---|---|---|---|
| BAS | First Floor | 1,138 | 1,138 | 1,138 | 180.63 | 205,557 |
| EAU | Attic, Expansion, Unfinished | 0 | 988 | 99 | 18.10 | 17,882 |
| FBM | Basement, Finished | 0 | 550 | 193 | 63.38 | 34,862 |
| FEP | Porch, Enclosed, Finished | 0 | 314 | 220 | 126.56 | 39,739 |
| FUS | Upper Story, Finished | 1,231 | 1,368 | 1,231 | 162.54 | 222,356 |
| UBM | Basement, Unfinished | 0 | 308 | 62 | 36.36 | 11,199 |
| UEP | Porch, Enclosed, Unfinished | 0 | 230 | 104 | 81.68 | 18,786 |
| UGR | Garage, Unfinished | 0 | 280 | 84 | 54.19 | 15,173 |
| USP | Porch, Screen, Unfinished | 0 | 112 | 34 | 54.83 | 6,141 |
| | Ttl. Gross Liv/Lease Area: | 2,369 | 5,288 | 3,165 | | 571,694 |

PROP. LOC.: 26 MT PLEASANT

MAP I.D.: 11A/ / 82/ /

Other i.d.: 11A000082

Bldg. 1 Card 1 of 1

Print Date: 12/23/98

| CURRENT OWNER | TOPO. | UTILITIES | STRT/ROAD | LOCATION |
|---|---|---|---|---|
| LINDSEY, CARRA N<br><br>26 MT PLEASANT<br>AMHERST, MA 01002 | | 2 Public W<br>3 Public S | | |

SUPPLEMENTAL DATA

Account No.: PHOTO
PRECINCT

CURRENT ASSESSMENT

| Description | Code | Appraised Value | Assessed Value |
|---|---|---|---|
| RES LAND | 1010 | 64,800 | 64,800 |
| RESIDNTL | 1010 | 169,000 | 169,000 |
| Total | | 233,800 | 233,800 |

601

AMHERST, MA

MMC

| RECORD OF OWNERSHIP | BK-VOL/PAGE | MO/DY/YR | qu | vi | SALE PRICE | V.C. |
|---|---|---|---|---|---|---|
| LINDSEY, CARRA N | 900/367 | 01/01/81 | | | 0 | |

PREVIOUS ASSESSMENTS (HISTORY)

| Yr | Code | Assessed Value | Yr | Code | Assessed Value | Yr | Code | Assessed Value |
|---|---|---|---|---|---|---|---|---|
| 99 | 1010 | 64,800 | 98 | 1010 | 64,800 | 97 | 1010 | 83,500 |
| 99 | 1010 | 169,000 | 98 | 1010 | 169,000 | 97 | 1010 | 169,000 |
| | Total | 233,800 | | Total | 233,800 | | Total | 252,500 |

EXEMPTIONS

| Year | Type/Description | Code | Amount |
|---|---|---|---|
| | | Total | 0.00 |

OTHER ASSESSMENTS

| Code | Description | Number | Amount | Comm. Int. |
|---|---|---|---|---|
| | | | | |

THIS SIGNATURE ACKNOWLEDGES A VISIT BY A DATA COLLECTOR OR ASSESSOR

X

COMPARABLE

| Rtng | Parcel I.D./MBLU | Mo | Yr | Value | Adjust. | Adjust. Value |
|---|---|---|---|---|---|---|
| | | | | | | |

APPRAISED VALUE SUMMARY

| | |
|---|---|
| Appraised Bldg. Value (Card) | 162,300 |
| Appraised X.F.(B) Value (Bldg) | 6,700 |
| Appraised O.B.(L) Value (Bldg) | 0 |
| Appraised Land Value (Bldg) | 64,800 |
| Special Land Value | 0 |
| Total Appraised Card Value | 233,800 |
| Total Appraised Parcel Value | 233,800 |
| Exemption(s) | |
| Net Total Appraised Parcel Value | 233,800 |

BUILDING PERMIT RECORD

| Permit I.D.# | Issue Date | Type | Description | Amount | Insp. Date | %Cmp | Date Cmp | Comments |
|---|---|---|---|---|---|---|---|---|
| 831263 | 093083 | | | 7,000 | | 0 | | |

VISIT/CHANGE HISTORY

| Date | I.D. | Cd | Purpose/Result |
|---|---|---|---|
| 10/20/90 | HG | | |

LAND LINE DATA AND VALUATION SECTION

| B# | UsCd | Description | Zone | D | Fmtg | Depth | No. of Units | Tp | Unit Price | I. Fctr | Sl | Cn Fct | Nhbhd | Adj. | Notes-Adj/Spcl Lnd Prcng | Adj. Unit Price | Land Value |
|---|---|---|---|---|---|---|---|---|---|---|---|---|---|---|---|---|---|
| 1 | 1010 | SINGLE FAM | RG10 | | | | 12,000.00 | SF | 5.20 | 1.15 | 0 | 1.00 | CE | .88 | | 5.25 | 63,000 |
| 1 | 1010 | SINGLE FAM | RG11 | | | | 25,897.00 | SF | 0.07 | 1.15 | 0 | 1.00 | CE | .88 | | 0.07 | 1,800 |
| | | | | | | Total Land Units | 37,897.00 | SF | | | | | | | | Total | 64,800 |

## CONSTRUCTION DETAIL

| Element | Cd | Ch | Description |
|---|---|---|---|
| Style/Type | 03 | | Colonial |
| Model | 01 | | Residential |
| Grade | 28 | | Grade = 140% |
| Stories | 2 | | 2 Stories |
| Occupancy | 00 | | |
| Exter. Wall 1 | 11 | | Clapboard |
| 2 | | | |
| Roof Structure | 05 | | Salt Box |
| Roof Cover | 11 | | Slate |
| Inter. Wall 1 | 03 | | Plaster/SkimC |
| 2 | | | |
| Inter. Floor 1 | 12 | | Hardwood |
| 2 | | | |
| Heating Fuel | 02 | | Oil |
| Type | 04 | | Forced Air-Duc |
| Air/Cn Type | 01 | | None |
| Bedrooms | 06 | | 6 Bedrooms |
| Bathrooms | 3 | | 3 Bathrooms |
| Total Rooms | 10 | | 10 Rooms |
| Bath Type | 02 | | Modern |
| Kitchen Style | 02 | | Modern |

### Commercial Data/Elements

| Element | Cd | Ch | Description |
|---|---|---|---|
| Heat + A/C | | | |
| Frame Type | | | |
| Baths/Plmng | | | |
| Ceilng/Wl Fr | | | |
| Rooms/Prtns | | | |
| % Com.Wall | | | |
| Wall Height | | | |

### Condo./Coop. Data

| Description | Code | Description | Factor |
|---|---|---|---|
| Cndo. Cmplx | | | |
| Floor Adj. | | | |
| Unit Locatn | | | |
| Numbr Units | | | |
| Numbr Levls | | | |
| % Ownership | | | |

### COST/MARKET VALUATION

| | | |
|---|---|---|
| Unadj Base Rate | 50.00 | |
| Size Adj Factor | 0.8830 | |
| Grade(Q) Index | 1.53 | |
| Adj Base Rate | 67.55 | |
| Bldg Value New | | 202,920 |
| Year Built | 1925 | |
| Effctve Yr Built | 1976 | |
| Nrml Physcl Dep | 20 | |
| Functnl Obslnce | 00 | |
| Eco/Ext Obslnce | 00 | |
| Specl Cnd Code | | |
| Specl Cnd % | | |
| Overall % Cndtn | 80 | |
| Deprec Bldg Value | | 162,300 |

### NOTES

FULL DORMER REAR SUN
ROOM ADDED 1983

### OB-OUTBUILDINGS & YARD ITEMS (L)

| Code | Description | L | Units | Unit Price | Yr. | Dp Rt | %Cnd | Apr. Value |
|---|---|---|---|---|---|---|---|---|
| | | | | | | | | |
| | | | | | | | Total OB Value | 0 |

### INCOME SECTION

## SKETCH

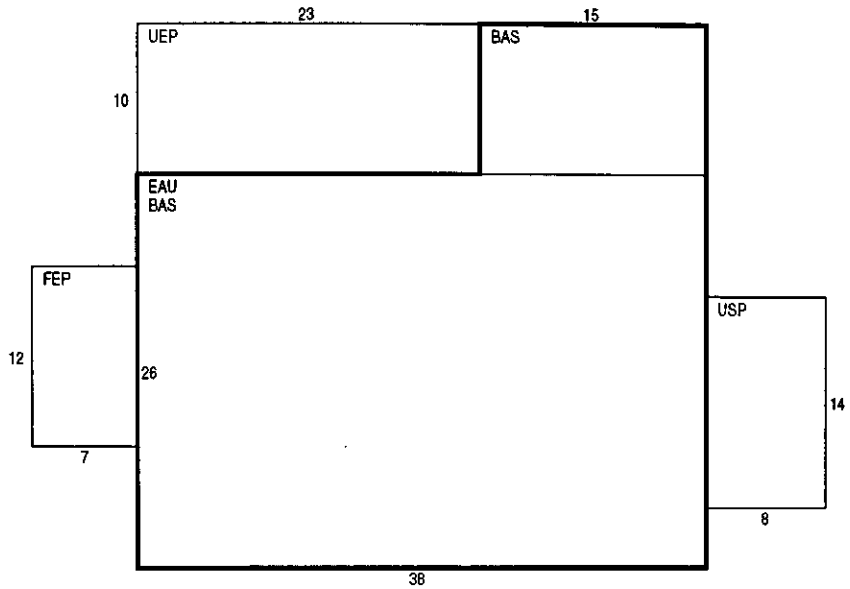


### BUILDING SUB-AREA SUMMARY SECTION

| Code | Description | Gross Area | Eff. Area | Unit Cost | Undeprec. Value |
|---|---|---|---|---|---|
| BAS | First Floor | 1,138 | 1,138 | 67.55 | 76,872 |
| EAU | Attic, Expansion, | 988 | 99 | 6.77 | 6,687 |
| FBM | Basement, Finished | 550 | 193 | 23.70 | 13,037 |
| FEP | Porch, Enclosed, F | 84 | 59 | 47.45 | 3,985 |
| FUS | Upper Story, Finis | 1,368 | 1,231 | 60.79 | 83,154 |
| UBM | Basement, Unfinish | 308 | 62 | 13.60 | 4,188 |
| UEP | Porch, Enclosed, U | 230 | 104 | 30.54 | 7,025 |
| UGR | Garage, Unfinished | 280 | 84 | 20.27 | 5,674 |
| USP | Porch, Screen, Unf | 112 | 34 | 20.51 | 2,297 |
| Ttl. Gross Liv/Lease Area | | | 3,004 | Bldg Value | 202,920 |

### XF-BUILDING EXTRA FEATURES (B)

| Code | Description | B | Units | Unit Price | Yr | Dp Rt | %Cnd | Appr. Value |
|---|---|---|---|---|---|---|---|---|
| FPL3 | FIREPLACE 2 ST | B | 2 | 3,500.00 | 91 | 1.00 | 100 | 6,700 |
| | | | | | Total XF Value | | | 6,700 |

(Sketch) Traverse Code

PTR[L15,D10,L23,D6],FEP[L7,D12,R7,U12],PTR[R15,U10,R23,U6],UGR[ 280],PTR[D10],EAU[L38,D26,R38,U26],PTR[U10],BAS[L15,D10,L23,D26,R38,U36],UBM[ 308],FBM[ 550],PTR[D18],USP[R8,D14,L8,U14],PTR[U18],PTR[L15],UEP[L23,D10,R23,U10],PTR[R15],FUS[1368]